PCB_NAME TPD.NT72690T.PB758（T）

PCB_TIME EL.NT72690-SG48

PCB_TIME D25243

H5 H7 NC/接地垫片,TP.MS638.PC793,15.8×6.8×3.3mm,T=0.3mm,黄铜片,本色,镀锡,V2.0,XXWJ

NC/接地垫片,TP.MS638.PC793,15.8×6.8×3.3mm,T=0.3mm,黄铜片,本色,镀锡,V2.0,XXWJ

GND

用于U1上

导热硅脂,导热系数0.91,白色,桶装,0.05g,JY

HS3

2 Heat2

1 Heat1

散热片,AL6063-T5,黑色,50×50×10mm,单面喷涂,4.5W,DIP PIN

C1

Heat1 R9 GND

C5

Heat2 R11 GND

P6

1

GND

NC/片式陶瓷电容,MC,50V,1000pF,±10%,X7R,0402,SMD,TP
磁珠,600ohm,0603,1A,SMD,TP,HCB1608KF-601T10,TAI-TECH
NC/片式陶瓷电容,MC,50V,1000pF,±10%,X7R,0402,SMD,TP
磁珠,600ohm,0603,1A,SMD,TP,HCB1608KF-601T10,TAI-TECH

NC/弹片,C,T972,81,3.5×1.5×2.5mm,T=0.1mm,不锈钢,本色,镀镍,触点镀金,非开模件,V1

DBSR

NC/NO DOLBY-2

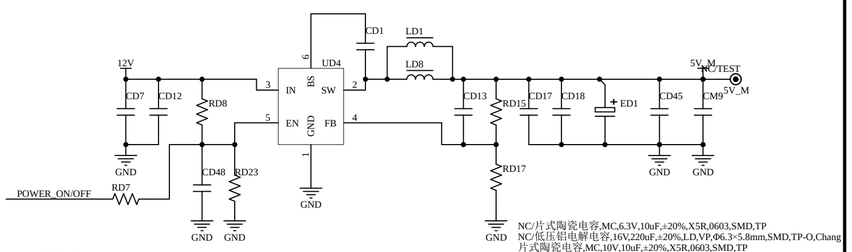

片式陶瓷电容,MC,16V,0.1uF,±10%,X7R,0402,SMD,TP
功率电感,4.7uH,2.8A,DR5.8×4.5mm,SMD,HCCD0504T-4R7M,HUACHEN
降压DC-DC芯片,Syn,4.5~17V,2A,600kHz,3.2A,TSOT23-6,SMD,KP522201ALGA,kiwiinst
NC/功率电感,4.7uH,4A,5.7×5.1×3mm,SMD,CKST0503-4.7μH/M,CK

NC/片式陶瓷电容,MC,6.3V,10uF,±20%,X5R,0603,SMD,TP
NC/低压铝电解电容,16V,220uF,±20%,L,D,VP,Φ6.3×5.8mm,SMD,TP-O,Chang
片式陶瓷电容,MC,10V,10uF,±20%,X5R,0603,SMD,TP
NC/片式陶瓷电容,MC,50V,100pF,±5%,NPO,0402,SMD,TP
NC/片式陶瓷电容,MC,16V,0.1uF,±10%,X7R,0402,SMD,TP
厚膜电阻,1/16W,47kohm,±1%,0402,SMD
厚膜电阻,1/16W,8.2kohm,±1%,0402,SMD
NC/片式陶瓷电容,MC,10V,22uF,±20%,X5R,0603,SMD,TP

厚膜电阻,1/16W,20kohm,±1%,0402,SMD
片式陶瓷电容,MC,16V,10uF,±20%,X5R,0805,SMD,TP
片式陶瓷电容,MC,16V,0.1uF,±10%,X7R,0402,SMD,TP
NC/厚膜电阻,1/16W,100kohm,±5%,0402,SMD
NC/厚膜电阻,1/16W,18kohm,±1%,0402,SMD
NC/片式陶瓷电容,MC,16V,0.1uF,±10%,X7R,0402,SMD,TP

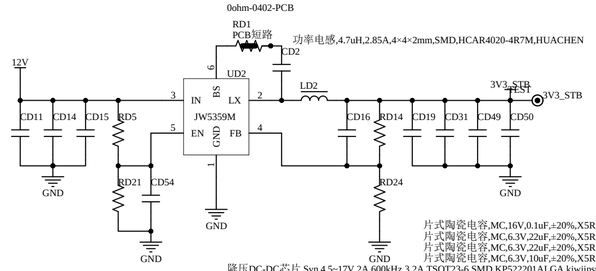

片式陶瓷电容,MC,16V,0.1uF,±20%,X5R,0402,SMD,TP
片式陶瓷电容,MC,6.3V,22uF,±20%,X5R,0603,SMD,TP
片式陶瓷电容,MC,6.3V,22uF,±20%,X5R,0603,SMD,TP
片式陶瓷电容,MC,6.3V,10uF,±20%,X5R,0603,SMD,TP
降压DC-DC芯片,Syn,4.5~17V,2A,600kHz,3.2A,TSOT23-6,SMD,KP522201ALGA,kiwiinst
片式陶瓷电容,MC,50V,33pF,±5%,NPO,0402,SMD,TP
厚膜电阻,1/16W,51kohm,±1%,0402,SMD
厚膜电阻,1/16W,15kohm,±1%,0402,SMD
NC/片式陶瓷电容,MC,16V,0.1uF,±20%,X5R,0402,SMD,TP

片式陶瓷电容,MC,16V,10uF,±20%,X5R,0805,SMD,TP

NC/片式陶瓷电容,MC,16V,0.1uF,±20%,X5R,0402,SMD,TP
厚膜电阻,1/16W,100kohm,±5%,0402,SMD
NC/厚膜电阻,1/16W,30kohm,±5%,0402,SMD
NC/片式陶瓷电容,MC,16V,0.1uF,±20%,X5R,0402,SMD,TP
NC/片式陶瓷电容,MC,16V,10uF,±20%,X7R,0805,SMD,TP

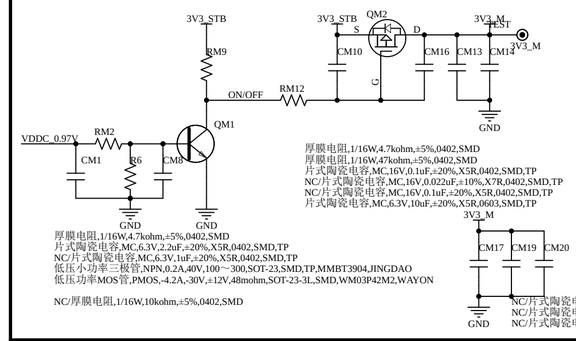

厚膜电阻,1/16W,4.7kohm,±5%,0402,SMD
厚膜电阻,1/16W,47kohm,±5%,0402,SMD
片式陶瓷电容,MC,16V,0.1uF,±20%,X5R,0402,SMD,TP
NC/片式陶瓷电容,MC,16V,0.022uF,±10%,X7R,0402,SMD,TP
NC/片式陶瓷电容,MC,16V,0.1uF,±20%,X5R,0402,SMD,TP
片式陶瓷电容,MC,6.3V,10uF,±20%,X5R,0603,SMD,TP

厚膜电阻,1/16W,4.7kohm,±5%,0402,SMD
片式陶瓷电容,MC,6.3V,2.2uF,±20%,X5R,0402,SMD,TP
NC/片式陶瓷电容,MC,6.3V,1uF,±20%,X5R,0402,SMD,TP
低压小功率三极管,NPN,0.2A,40V,100～300,SOT-23,SMD,TP,MMBT3904,JINGDAO
低压功率MOS管,PMOS,-4.2A,-30V,±12V,48mohm,SOT-23-3L,SMD,WM03P42M2,WAYON

NC/厚膜电阻,1/16W,10kohm,±5%,0402,SMD

3V3_M
CM17
CM19
CM20
GND
NC/片式陶瓷电容,MC,16V,0.1uF,±20%,X5R,0402,SMD,TP
NC/片式陶瓷电容,MC,16V,0.1uF,±20%,X5R,0402,SMD,TP
NC/片式陶瓷电容,MC,16V,0.1uF,±20%,X5R,0402,SMD,TP

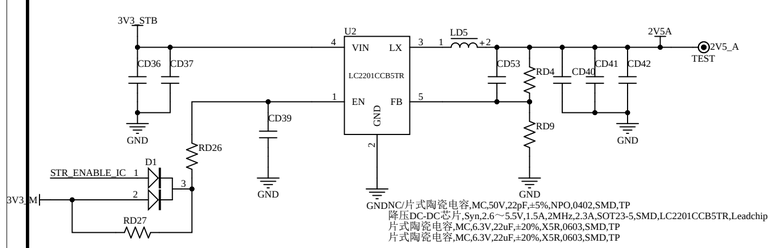

NC/片式陶瓷电容,MC,50V,22pF,±5%,NPO,0402,SMD,TP
降压DC-DC芯片,Syn,2.6~5.5V,1.5A,2MHz,2.3A,SOT23-5,SMD,LC2201CCB5TR,Leadchip
片式陶瓷电容,MC,6.3V,22uF,±20%,X5R,0603,SMD,TP
片式陶瓷电容,MC,6.3V,22uF,±20%,X5R,0603,SMD,TP

片式陶瓷电容,MC,6.3V,10uF,±20%,X5R,0603,SMD,TP
NC/片式陶瓷电容,MC,16V,0.1uF,±20%,X5R,0402,SMD,TP
NC/片式陶瓷电容,MC,16V,0.22uF,±20%,X5R,0402,SMD,TP
厚膜电阻,1/16W,0ohm,±5%,0402,SMD
厚膜电阻,1/16W,10kohm,±5%,0402,SMD
NC/小信号类肖特基二极管,DC,0.2A,30V,SOT-23,SMD,TP,BAT54C,BLUE ROCKET

厚膜电阻,1/16W,39kohm,±1%,0402,SMD
厚膜电阻,1/16W,12kohm,±1%,0402,SMD
NC/片式陶瓷电容,MC,16V,0.1uF,±20%,X5R,0402,SMD,TP
功率电感,2.2uH,2.1A,2.5×2×1.2mm,SMD,CKCSA252012-2.2uH/M-9BZTY02-SP,CK

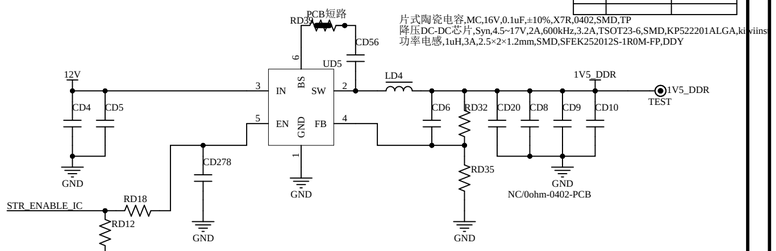

片式陶瓷电容,MC,16V,0.1uF,±10%,X7R,0402,SMD,TP
降压DC-DC芯片,Syn,4.5~17V,2A,600kHz,3.2A,TSOT23-6,SMD,KP522201ALGA,kiwiinst
功率电感,1uH,3A,2.5×2×1.2mm,SMD,SFEK252012S-1R0M-FP,DDY

厚膜电阻,1/16W,100kohm,±5%,0402,SMD
片式陶瓷电容,MC,25V,10uF,±20%,X5R,0603,SMD,TP
NC/片式陶瓷电容,MC,16V,0.1uF,±20%,X5R,0402,SMD,TP

NC/片式陶瓷电容,MC,16V,0.1uF,±20%,X5R,0402,SMD,TP
厚膜电阻,1/16W,10kohm,±5%,0402,SMD

NC/片式陶瓷电容,MC,50V,22pF,±5%,NPO,0402,SMD,TP
片式陶瓷电容,MC,6.3V,22uF,±20%,X5R,0603,SMD,TP
片式陶瓷电容,MC,6.3V,22uF,±20%,X5R,0603,SMD,TP
片式陶瓷电容,MC,6.3V,22uF,±20%,X5R,0603,SMD,TP

厚膜电阻,1/16W,51kohm,±1%,0402,SMD
厚膜电阻,1/16W,51kohm,±1%,0402,SMD
NC/片式陶瓷电容,MC,16V,0.1uF,±20%,X5R,0402,SMD,TP

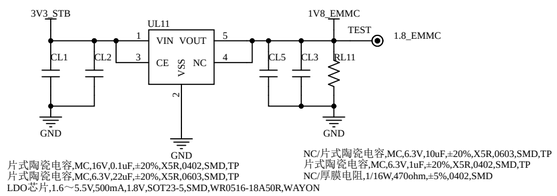

片式陶瓷电容,MC,16V,0.1uF,±20%,X5R,0402,SMD,TP
片式陶瓷电容,MC,6.3V,22uF,±20%,X5R,0603,SMD,TP
LDO芯片,1.6～5.5V,500mA,1.8V,SOT23-5,SMD,WR0516-18A50R,WAYON

NC/片式陶瓷电容,MC,6.3V,10uF,±20%,X5R,0603,SMD,TP
片式陶瓷电容,MC,6.3V,1uF,±20%,X5R,0402,SMD,TP
NC/厚膜电阻,1/16W,470ohm,±5%,0402,SMD

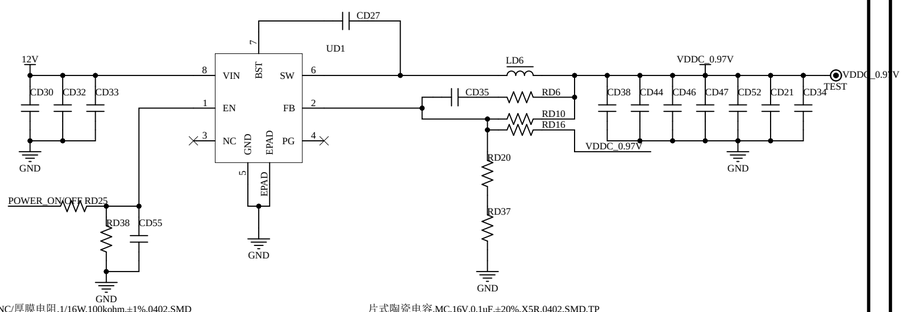

NC/厚膜电阻,1/16W,100kohm,±1%,0402,SMD
厚膜电阻,1/16W,100kohm,±5%,0402,SMD
功率电感,1uH,5.8A,4×4×2mm,SMD,CKCSA4020-1uH/M-9BZ-SP,CK
降压DC-DC芯片,Syn,4.5~18V,6A,580kHz,ESOP-8,SMD,JW5306ESOP#TR,Joulwatt
片式陶瓷电容,MC,MC,16V,10uF,±20%,X5R,0805,SMD,TP
NC/片式陶瓷电容,MC,16V,0.1uF,±20%,X5R,0402,SMD,TP
NC/片式陶瓷电容,MC,16V,0.1uF,±20%,X5R,0402,SMD,TP
片式陶瓷电容,MC,16V,10uF,±20%,X5R,0805,SMD,TP

片式陶瓷电容,MC,16V,0.1uF,±20%,X5R,0402,SMD,TP
NC/厚膜电阻,1/16W,18kohm,±1%,0402,SMD
NC/厚膜电阻,1/16W,0ohm,±5%,0402,SMD
NC/片式陶瓷电容,MC,50V,330pF,±5%,NPO,0402,SMD,TP

厚膜电阻,1/16W,6.8kohm,±1%,0402,SMD
厚膜电阻,1/16W,0ohm,±5%,0402,SMD
厚膜电阻,1/16W,24.9kohm,±1%,0402,SMD

NC/片式陶瓷电容,MC,16V,0.1uF,±20%,X5R,0402,SMD,TP
片式陶瓷电容,MC,6.3V,22uF,±20%,X5R,0603,SMD,TP
NC/片式陶瓷电容,MC,6.3V,22uF,±20%,X5R,0603,SMD,TP
片式陶瓷电容,MC,6.3V,22uF,±20%,X5R,0603,SMD,TP
NC/片式陶瓷电容,MC,6.3V,22uF,±20%,X5R,0603,SMD,TP
NC/片式陶瓷电容,MC,6.3V,22uF,±20%,X5R,0603,SMD,TP

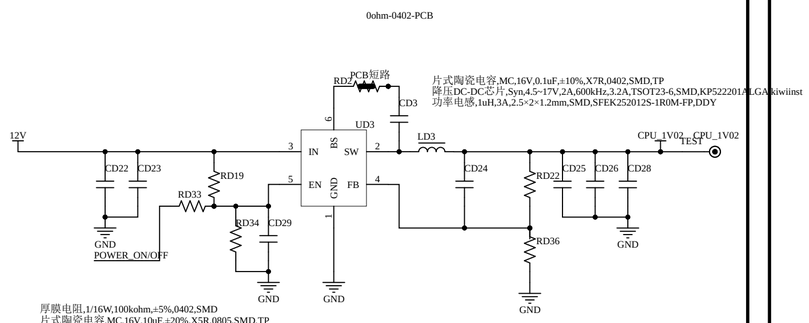

片式陶瓷电容,MC,16V,0.1uF,±10%,X7R,0402,SMD,TP
降压DC-DC芯片,Syn,4.5~17V,2A,600kHz,3.2A,TSOT23-6,SMD,KP522201ALGA,kiwiinst
功率电感,1uH,3A,2.5×2×1.2mm,SMD,SFEK252012S-1R0M-FP,DDY

厚膜电阻,1/16W,100kohm,±5%,0402,SMD
片式陶瓷电容,MC,16V,10uF,±20%,X5R,0805,SMD,TP
NC/片式陶瓷电容,MC,16V,0.1uF,±20%,X5R,0402,SMD,TP

NC/厚膜电阻,1/16W,100kohm,±5%,0402,SMD
NC/厚膜电阻,1/16W,9.1kohm,±1%,0402,SMD
片式陶瓷电容,MC,16V,0.1uF,±20%,X5R,0402,SMD,TP
NC/片式陶瓷电容,MC,50V,22pF,±5%,NPO,0402,SMD,TP

厚膜电阻,1/16W,7.5kohm,±1%,0402,SMD
厚膜电阻,1/16W,22kohm,±1%,0402,SMD

片式陶瓷电容,MC,16V,0.1uF,±20%,X5R,0402,SMD,TP
片式陶瓷电容,MC,6.3V,22uF,±20%,X5R,0603,SMD,TP
片式陶瓷电容,MC,6.3V,22uF,±20%,X5R,0603,SMD,TP

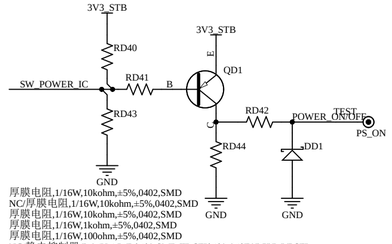

厚膜电阻,1/16W,10kohm,±5%,0402,SMD
NC/厚膜电阻,1/16W,10kohm,±5%,0402,SMD
厚膜电阻,1/16W,10kohm,±5%,0402,SMD
厚膜电阻,1/16W,1kohm,±5%,0402,SMD
厚膜电阻,1/16W,100ohm,±5%,0402,SMD
NC/静电抑制器,D,24V,4.5pF,0402,SMD,TP,SFI0402-240E2R5PP-LF,SFI
低压小功率三极管,PNP,-0.2A,-40V,100~300,SOT-23,SMD,TP,MMBT3906,JINGDAO

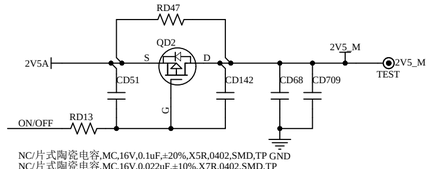

NC/片式陶瓷电容,MC,16V,0.1uF,±20%,X5R,0402,SMD,TP
NC/片式陶瓷电容,MC,16V,0.022uF,±10%,X7R,0402,SMD,TP
NC/厚膜电阻,1/16W,47kohm,±5%,0402,SMD
厚膜电阻,1/10W,0ohm,±5%,0603,SMD
NC/低压功率MOS管,PMOS,-4.4A,-30V,±12V,37.5mohm,SOT-23,SMD,NCE3401BY,NCEPOWER
NC/片式陶瓷电容,MC,6.3V,10uF,±20%,X5R,0603,SMD,TP
NC/片式陶瓷电容,MC,16V,0.1uF,±20%,X5R,0402,SMD,TP

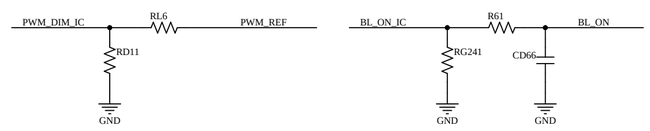

厚膜电阻,1/16W,100ohm,±5%,0402,SMD
NC/厚膜电阻,1/16W,4.7kohm,±5%,0402,SMD

NC/厚膜电阻,1/16W,10kohm,±5%,0402,SMD
厚膜电阻,1/16W,470ohm,±5%,0402,SMD
NC/片式陶瓷电容,MC,16V,0.1uF,±20%,X5R,0402,SMD,TP

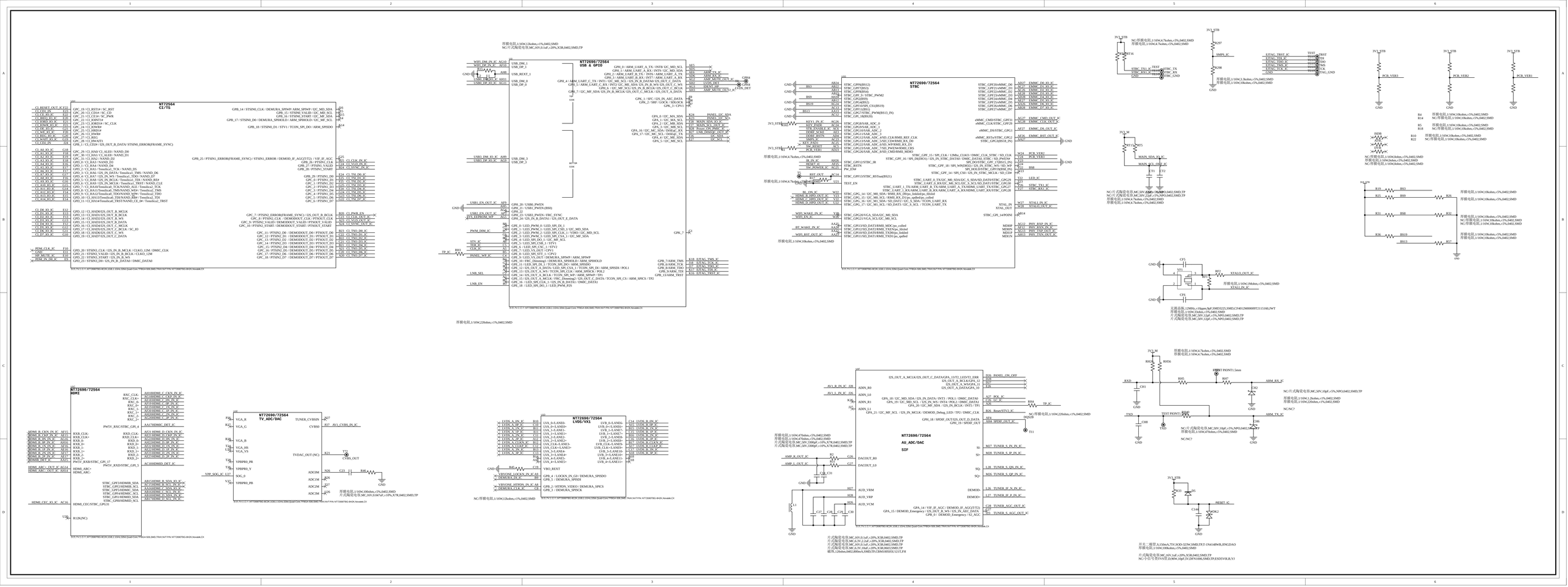
NT72690/72564
CI/TS
NT72690/72564
USB & GPIO
NT72690/72564
STBC
NT72690/72564
HDMI
NT72690/72564
TV_ADC/DAC
NT72690/72564
LVDS/VX1
NT72690/72564
AU_ADC/DAC
SIF
厚膜电阻,1/16W,220ohm,±1%,0402,SMD
厚膜电阻,1/16W,10kohm,±5%,0402,SMD
厚膜电阻,1/16W,4.7kohm,±5%,0402,SMD
NC/不式陶瓷电容,MC,50V,10pF,±5%,NPO,0402,SMD,TP
厚膜电阻,1/16W,100ohm,±5%,0402,SMD
片式陶瓷电容,MC,16V,0.1uF,±20%,X5R,0402,SMD,TP
片式陶瓷电容,MC,25V,10uF,±5%,NPO,0402,SMD,TP
NC/小信号肖特基管,BAW56,30pF,5V,DFN1006,SMD,TP,ESD5V0L8,YJ

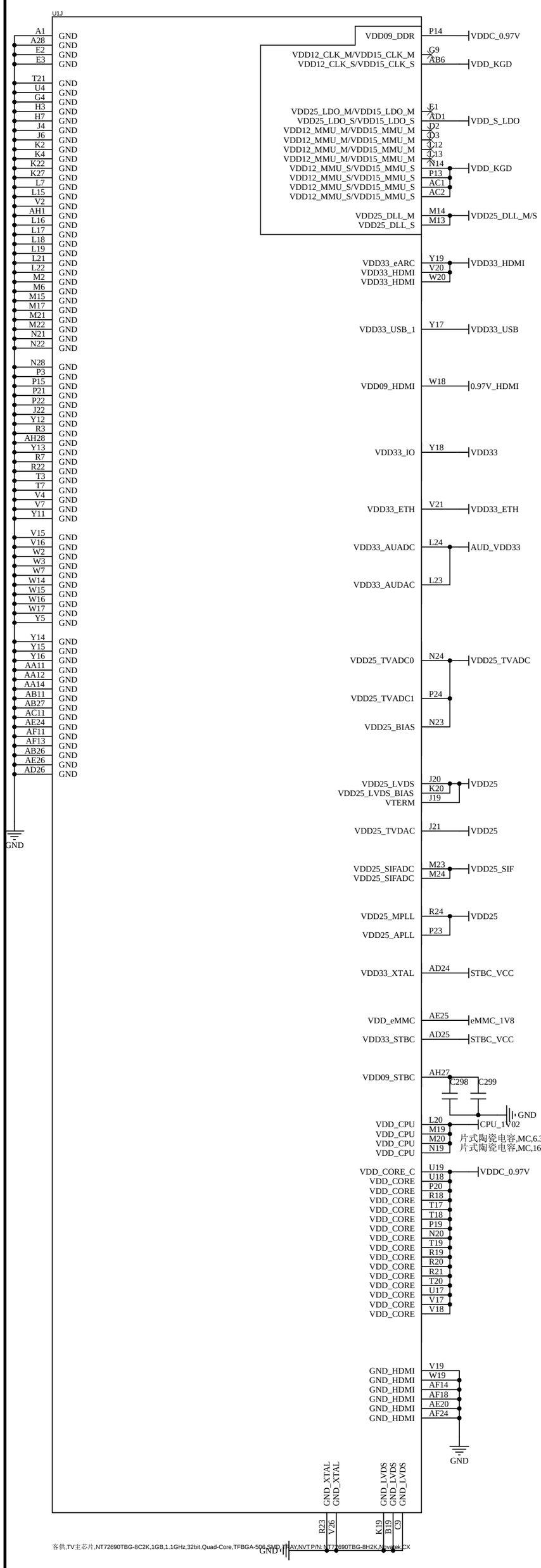

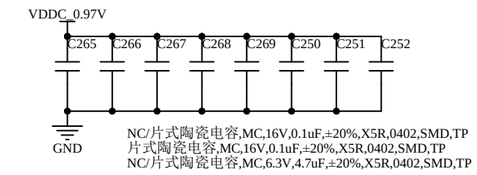

NC/片式陶瓷电容,MC,16V,0.1uF,±20%,X5R,0402,SMD,TP
片式陶瓷电容,MC,16V,0.1uF,±20%,X5R,0402,SMD,TP
NC/片式陶瓷电容,MC,6.3V,4.7uF,±20%,X5R,0402,SMD,TP

片式陶瓷电容,MC,16V,0.1uF,±20%,X5R,0402,SMD,TP
片式陶瓷电容,MC,6.3V,4.7uF,±20%,X5R,0402,SMD,TP
片式陶瓷电容,MC,6.3V,10uF,±20%,X5R,0603,SMD,TP
NC/片式陶瓷电容,MC,6.3V,10uF,±20%,X5R,0603,SMD,TP
NC/片式陶瓷电容,MC,6.3V,10uF,±20%,X5R,0603,SMD,TP

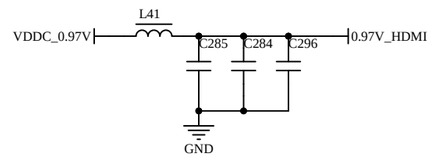

磁珠,120ohm,0402,800mA,SMD,TP,CBM100505U121T,FH
片式陶瓷电容,MC,16V,0.1uF,±20%,X5R,0402,SMD,TP
片式陶瓷电容,MC,6.3V,10uF,±20%,X5R,0603,SMD,TP
片式陶瓷电容,MC,6.3V,4.7uF,±20%,X5R,0402,SMD,TP

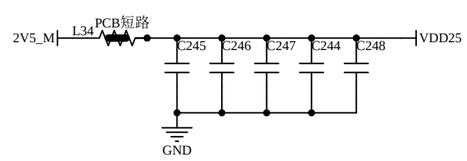

NC/0ohm-0603-PCB
片式陶瓷电容,MC,6.3V,22uF,±20%,X5R,0603,SMD,TP
片式陶瓷电容,MC,16V,0.1uF,±20%,X5R,0402,SMD,TP
NC/片式陶瓷电容,MC,16V,0.1uF,±20%,X5R,0402,SMD,TP
NC/片式陶瓷电容,MC,16V,0.1uF,±20%,X5R,0402,SMD,TP
片式陶瓷电容,MC,6.3V,4.7uF,±20%,X5R,0402,SMD,TP

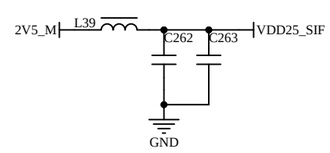

磁珠,120ohm,0402,800mA,SMD,TP,CBM100505U121T,FH
片式陶瓷电容,MC,16V,0.1uF,±20%,X5R,0402,SMD,TP
片式陶瓷电容,MC,6.3V,4.7uF,±20%,X5R,0402,SMD,TP

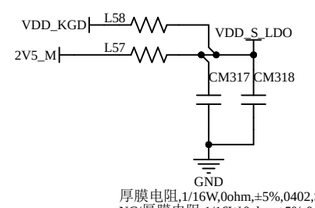

厚膜电阻,1/16W,0ohm,±5%,0402,SMD
NC/厚膜电阻,1/16W,0ohm,±5%,0402,SMD
片式陶瓷电容,MC,6.3V,4.7uF,±20%,X5R,0402,SMD,TP
片式陶瓷电容,MC,16V,0.1uF,±20%,X5R,0402,SMD,TP

磁珠,120ohm,0402,800mA,SMD,TP,CBM100505U121T,FH
片式陶瓷电容,MC,16V,0.1uF,±20%,X5R,0402,SMD,TP
片式陶瓷电容,MC,6.3V,10uF,±20%,X5R,0603,SMD,TP

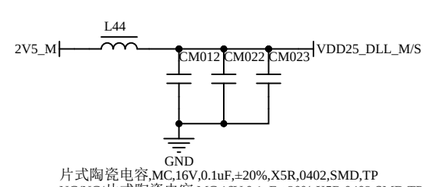

片式陶瓷电容,MC,16V,0.1uF,±20%,X5R,0402,SMD,TP
NC/NC/片式陶瓷电容,MC,16V,0.1uF,±20%,X5R,0402,SMD,TP
片式陶瓷电容,MC,16V,0.1uF,±20%,X5R,0402,SMD,TP
磁珠,120ohm,0402,800mA,SMD,TP,CBM100505U121T,FH

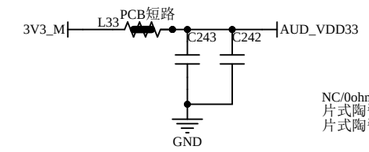

NC/0ohm-0402-PCB
片式陶瓷电容,MC,6.3V,10uF,±20%,X5R,0603,SMD,TP
片式陶瓷电容,MC,16V,0.1uF,±20%,X5R,0402,SMD,TP

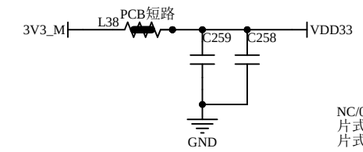

NC/0ohm-0402-PCB
片式陶瓷电容,MC,6.3V,10uF,±20%,X5R,0603,SMD,TP
片式陶瓷电容,MC,16V,0.1uF,±20%,X5R,0402,SMD,TP

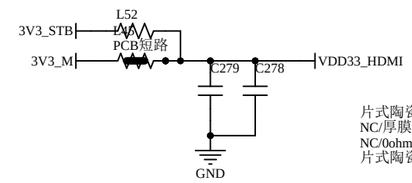

片式陶瓷电容,MC,6.3V,10uF,±20%,X5R,0603,SMD,TP
NC/厚膜电阻,1/16W,0ohm,±5%,0402,SMD
NC/0ohm-0402-PCB
片式陶瓷电容,MC,16V,0.1uF,±20%,X5R,0402,SMD,TP

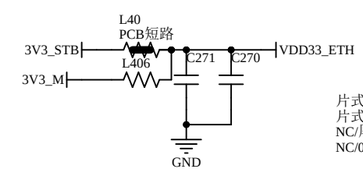

片式陶瓷电容,MC,6.3V,10uF,±20%,X5R,0603,SMD,TP
片式陶瓷电容,MC,16V,0.1uF,±20%,X5R,0402,SMD,TP
NC/厚膜电阻,1/16W,0ohm,±5%,0402,SMD
NC/0ohm-0402-PCB

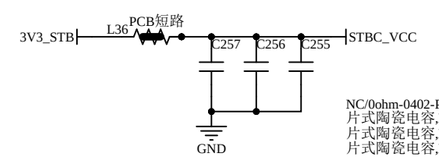

NC/0ohm-0402-PCB
片式陶瓷电容,MC,16V,0.1uF,±20%,X5R,0402,SMD,TP
片式陶瓷电容,MC,16V,0.1uF,±20%,X5R,0402,SMD,TP
片式陶瓷电容,MC,6.3V,22uF,±20%,X5R,0603,SMD,TP

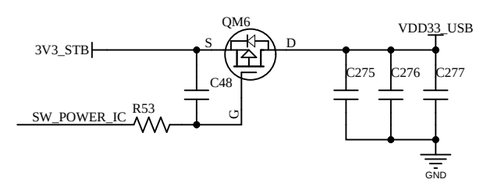

NC/片式陶瓷电容,MC,6.3V,10uF,±20%,X5R,0603,SMD,TP
片式陶瓷电容,MC,16V,0.1uF,±20%,X5R,0402,SMD,TP
片式陶瓷电容,MC,6.3V,22uF,±20%,X5R,0603,SMD,TP
片式陶瓷电容,MC,16V,0.22uF,±20%,X5R,0402,SMD,TP
厚膜电阻,1/16W,47kohm,±5%,0402,SMD
低压功率MOS管,PMOS,-4.2A,-30V,±12V,48mohm,SOT-23-3L,SMD,WM03P42M2,WAYON

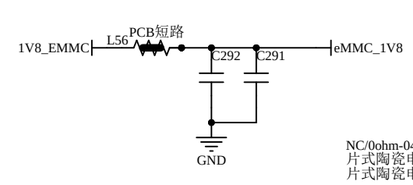

NC/0ohm-0402-PCB
片式陶瓷电容,MC,16V,0.1uF,±20%,X5R,0402,SMD,TP
片式陶瓷电容,MC,6.3V,22uF,±20%,X5R,0603,SMD,TP

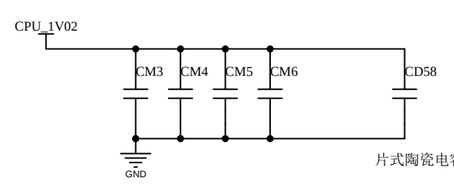

片式陶瓷电容,MC,6.3V,4.7uF,±20%,X5R,0402,SMD,TP

片式陶瓷电容,MC,6.3V,10uF,±20%,X5R,0603,SMD,TP
NC/片式陶瓷电容,MC,16V,0.1uF,±20%,X5R,0402,SMD,TP
NC/片式陶瓷电容,MC,16V,0.1uF,±20%,X5R,0402,SMD,TP
片式陶瓷电容,MC,16V,0.1uF,±20%,X5R,0402,SMD,TP

NAMING RULE
CA DDR4/DDR3
DQ DDR4_16BITS/DDR3 16BITS

U1A

DDRM_A0	U6	MA0/MA2	MDQ0/MDQ2	G1	DDRM_DQ0
DDRM_A1	T5	MA1/MRASN	MDQ1	J3	DDRM_DQ1
DDRM_A2	V1	MA2/MA13	MDQ2/MDQ0	G2	DDRM_DQ2
DDRM_A3	R4	MA3/MA15	MDQ3	K1	DDRM_DQ3
DDRM_A4	U3	MA4/MWEN	MDQ4/MDQ6	F2	DDRM_DQ4
DDRM_A5	R1	MA5/MA6	MDQ5/MDQ7	L3	DDRM_DQ5
DDRM_A6	W6	MA6/MA5	MDQ6/MDQ4	F3	DDRM_DQ6
DDRM_A7	T6	MA7/MA11	MDQ7/MDQ5	L2	DDRM_DQ7
DDRM_A8	V6	MA8/MA7			
DDRM_A9	T2	MA9/MA1			
DDRM_A10	U2	MA10/MCASN	MDQ8/MDQ15	G5	DDRM_DQ8
DDRM_A11	V3	MA11/MA9	MDQ9/MDQ12	K7	DDRM_DQ9
DDRM_A12	P6	MA12/MA12	MDQ10/MDQ13	G6	DDRM_DQ10
DDRM_A13	T1	MA13/MA14	MDQ11/MDQ14	K5	DDRM_DQ11
			MDQ12/MDQ11	F4	DDRM_DQ12
			MDQ13/MDQ10	L6	DDRM_DQ13
			MDQ14/MDQ9	F5	DDRM_DQ14
			MDQ15/MDQ8	L5	DDRM_DQ15
	R6	MTEN/MA8			
DDRM_ACTN	U5	MACTN/MA0			
DDRM_BA0	W4	MBA0/MA3			
DDRM_BA1	R2	MBA1/MA4			
DDRM_BG0	W5	MBG0/MBA0			
DDRM_CKE	N3	MCKE/MCKE			
DDRM_CASN	P5	MCASN/MBA1			
DDRM_RASN	P2	MRASN/MA10			
DDRM_ODT	Y3	MODT/MODT			
DDRM_WEN	Y2	MWEN/MBA2			
DDRM_CLK1T	M5	MCLK1t/MCLK1			
DDRM_CLK1C	M4	MCLK1c/MCLK1N			
			MDQS0t/MDQS0	H2	DDRM_DQS0T
			MDQS0c/MDQS0B	H1	DDRM_DQS0C
DDRM_CS0	M1	MCS0	MDQS1t/MDQS1	H5	DDRM_DQS1T
			MDQS1c/MDQS1B	J5	DDRM_DQS1C
MMUM_RSTN	Y1	MRST			
			MDM0	J2	DDRM_DM0
			MDM1	H6	DDRM_DM1
			Suspend_M/GPI_20	M16	TP66 TEST TS
L14		M_DDR_LDOOUT			

客供,TV主芯片,NT72690TBG-8C2K,1GB,1.1GHz,32bit,Quad-Core,TFBGA-506,SMD,TRAY,NVT P/N: NT72690TBG-8H2K,Novatek,CX

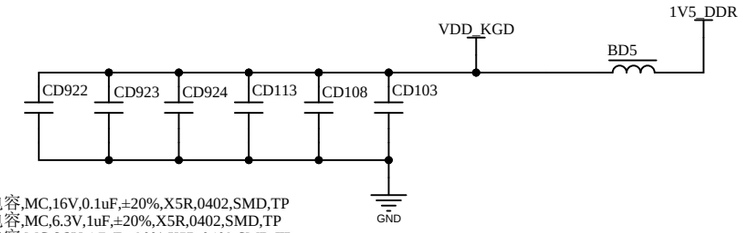

片式陶瓷电容,MC,16V,0.1uF,±20%,X5R,0402,SMD,TP
片式陶瓷电容,MC,6.3V,1uF,±20%,X5R,0402,SMD,TP
片式陶瓷电容,MC,6.3V,4.7uF,±20%,X5R,0402,SMD,TP
片式陶瓷电容,MC,16V,0.1uF,±20%,X5R,0402,SMD,TP
片式陶瓷电容,MC,6.3V,4.7uF,±20%,X5R,0402,SMD,TP
片式陶瓷电容,MC,6.3V,1uF,±20%,X5R,0402,SMD,TP

磁珠,120ohm,0603,3A,SMD,TP,HCB1608KF-121T30,TAI-TECH

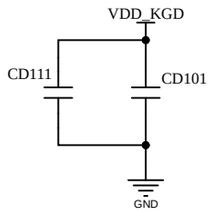

片式陶瓷电容,MC,16V,0.1uF,±20%,X5R,0402,SMD,TP
片式陶瓷电容,MC,6.3V,22uF,±20%,X5R,0603,SMD,TP

U1B
DDR4_KGD/DDR3_KGD
NT72690/72564

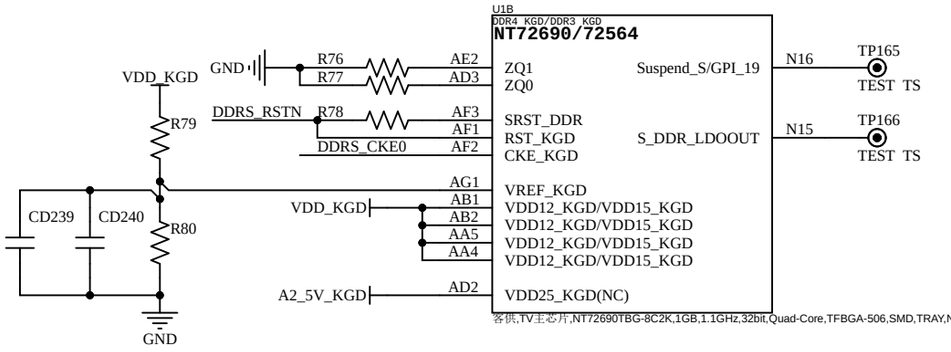

客供,TV主芯片,NT72690TBG-8C2K,1GB,1.1GHz,32bit,Quad-Core,TFBGA-506,SMD,TRAY,NVT P/N: NT72690TBG-8H2K,Novatek,CX

NC/厚膜电阻,1/16W,0ohm,±5%,0402,SMD
厚膜电阻,1/16W,1kohm,±1%,0402,SMD
厚膜电阻,1/16W,1kohm,±1%,0402,SMD
厚膜电阻,1/16W,240ohm,±1%,0402,SMD
厚膜电阻,1/16W,240ohm,±1%,0402,SMD
片式陶瓷电容,MC,16V,0.1uF,±20%,X5R,0402,SMD,TP
NC/片式陶瓷电容,MC,50V,1000pF,±10%,X7R,0402,SMD,TP

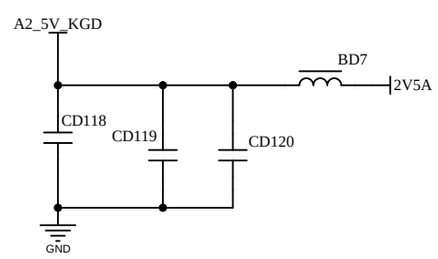

NC/磁珠,120ohm,0402,600mA,SMD,TP,FCM1005KF-121T06,Tai-tech
NC/片式陶瓷电容,MC,16V,0.1uF,±20%,X5R,0402,SMD,TP
NC/NC/片式陶瓷电容,MC,16V,0.1uF,±20%,X5R,0402,SMD,TP
NC/片式陶瓷电容,MC,6.3V,4.7uF,±20%,X5R,0402,SMD,TP

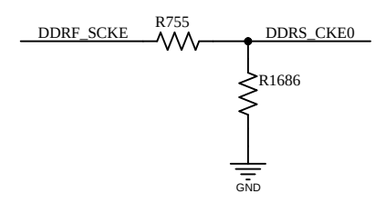

厚膜电阻,1/16W,1.2kohm,±1%,0402,SMD
厚膜电阻,1/16W,1kohm,±1%,0402,SMD

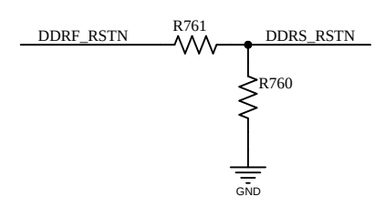

厚膜电阻,1/16W,12kohm,±1%,0402,SMD
厚膜电阻,1/16W,10kohm,±1%,0402,SMD

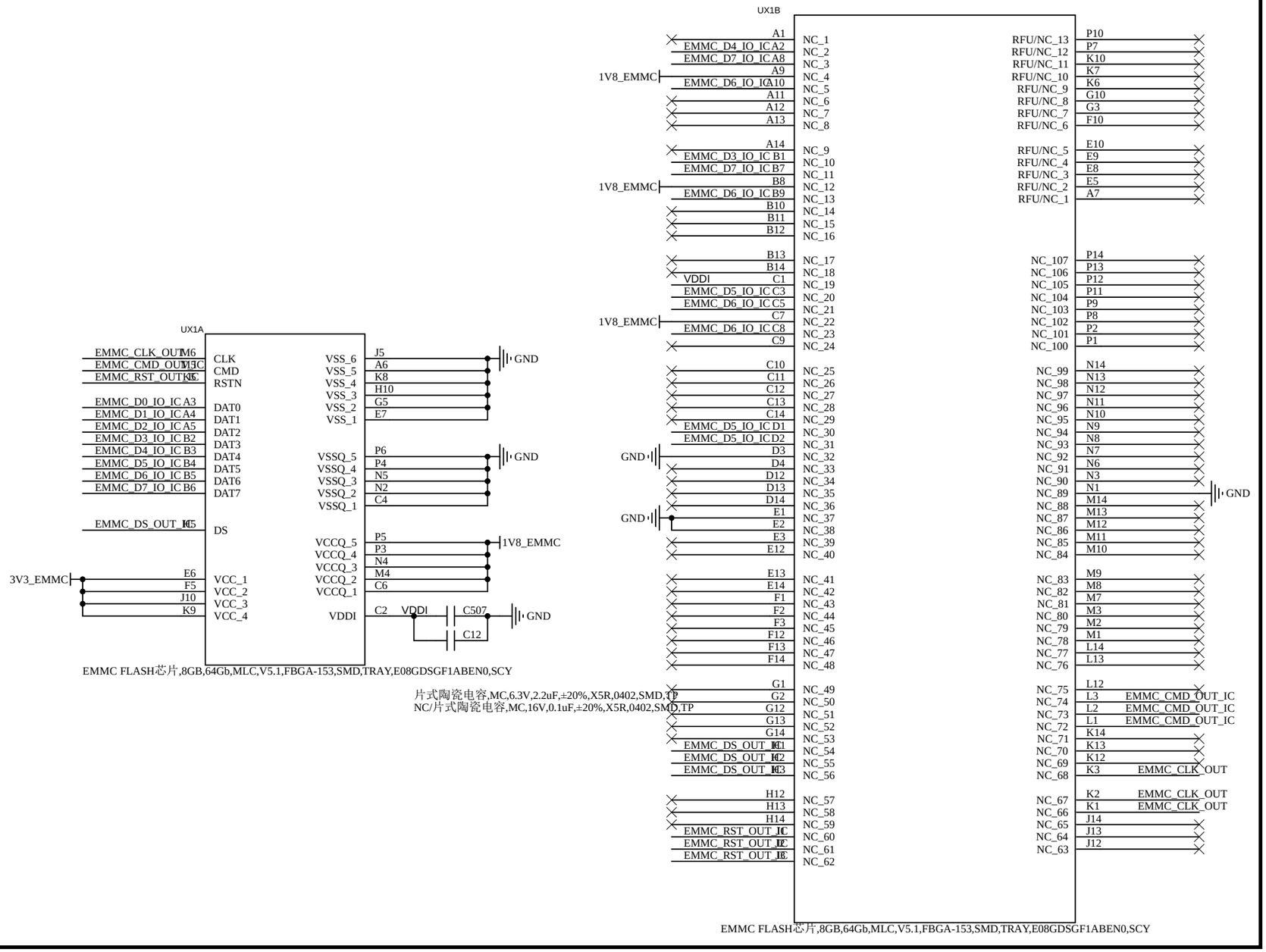
UX1A
EMMC_CLK_OUT M6
EMMC_CMD_OUT M3
EMMC_RST_OUT K5
EMMC_D0_IO_IC A3
EMMC_D1_IO_IC A4
EMMC_D2_IO_IC A5
EMMC_D3_IO_IC B2
EMMC_D4_IO_IC B3
EMMC_D5_IO_IC B4
EMMC_D6_IO_IC B5
EMMC_D7_IO_IC B6
EMMC_DS_OUT_IC L5
3V3_EMMC
E6
F5
J10
K9
CLK
CMD
RSTN
DAT0
DAT1
DAT2
DAT3
DAT4
DAT5
DAT6
DAT7
DS
VCC_1
VCC_2
VCC_3
VCC_4
VSS_6 J5
VSS_5 A6
VSS_4 K8
VSS_3 H10
VSS_2 G5
VSS_1 E7
GND
VSSQ_5 P6
VSSQ_4 P4
VSSQ_3 N5
VSSQ_2 N2
VSSQ_1 C4
GND
VCCQ_5 P5
VCCQ_4 P3
VCCQ_3 N4
VCCQ_2 M4
VCCQ_1 C6
1V8_EMMC
VDDI C2
VDDI
C507
C12
GND
EMMC FLASH芯片,8GB,64Gb,MLC,V5.1,FBGA-153,SMD,TRAY,E08GDSGF1ABEN0,SCY
UX1B
A1
EMMC_D4_IO_IC A2
EMMC_D7_IO_IC A8
1V8_EMMC A9
EMMC_D6_IO_IC A10
A11
A12
A13
A14
EMMC_D3_IO_IC B1
EMMC_D7_IO_IC B7
1V8_EMMC B8
EMMC_D6_IO_IC B9
B10
B11
B12
B13
B14
VDDI C1
EMMC_D5_IO_IC C3
EMMC_D6_IO_IC C5
1V8_EMMC C7
EMMC_D6_IO_IC C8
C9
C10
C11
C12
C13
C14
EMMC_D5_IO_IC D1
EMMC_D5_IO_IC D2
GND D3
D4
D12
D13
D14
GND E1
E2
E3
E12
E13
E14
F1
F2
F3
F12
F13
F14
G1
G2
G12
G13
G14
EMMC_DS_OUT_IC K1
EMMC_DS_OUT_IC K2
EMMC_DS_OUT_IC K3
H12
H13
H14
EMMC_RST_OUT_IC H1
EMMC_RST_OUT_IC H2
EMMC_RST_OUT_IC H3
NC_1
NC_2
NC_3
NC_4
NC_5
NC_6
NC_7
NC_8
NC_9
NC_10
NC_11
NC_12
NC_13
NC_14
NC_15
NC_16
NC_17
NC_18
NC_19
NC_20
NC_21
NC_22
NC_23
NC_24
NC_25
NC_26
NC_27
NC_28
NC_29
NC_30
NC_31
NC_32
NC_33
NC_34
NC_35
NC_36
NC_37
NC_38
NC_39
NC_40
NC_41
NC_42
NC_43
NC_44
NC_45
NC_46
NC_47
NC_48
NC_49
NC_50
NC_51
NC_52
NC_53
NC_54
NC_55
NC_56
NC_57
NC_58
NC_59
NC_60
NC_61
NC_62
RFU/NC_13 P10
RFU/NC_12 P7
RFU/NC_11 K10
RFU/NC_10 K7
RFU/NC_9 K6
RFU/NC_8 G10
RFU/NC_7 G3
RFU/NC_6 F10
RFU/NC_5 E10
RFU/NC_4 E9
RFU/NC_3 E8
RFU/NC_2 E5
RFU/NC_1 A7
NC_107 P14
NC_106 P13
NC_105 P12
NC_104 P11
NC_103 P9
NC_102 P8
NC_101 P2
NC_100 P1
NC_99 N14
NC_98 N13
NC_97 N12
NC_96 N11
NC_95 N10
NC_94 N9
NC_93 N8
NC_92 N7
NC_91 N6
NC_90 N3
NC_89 N1
GND
NC_88 M14
NC_87 M13
NC_86 M12
NC_85 M11
NC_84 M10
NC_83 M9
NC_82 M8
NC_81 M7
NC_80 M3
NC_79 M2
NC_78 M1
NC_77 L14
NC_76 L13
NC_75 L12
NC_74 L3 EMMC_CMD_OUT_IC
NC_73 L2 EMMC_CMD_OUT_IC
NC_72 L1 EMMC_CMD_OUT_IC
NC_71 K14
NC_70 K13
NC_69 K12
NC_68 K3 EMMC_CLK_OUT
NC_67 K2 EMMC_CLK_OUT
NC_66 K1 EMMC_CLK_OUT
NC_65 J14
NC_64 J13
NC_63 J12
片式陶瓷电容,MC,6.3V,2.2uF,±20%,X5R,0402,SMD,TP
NC/片式陶瓷电容,MC,16V,0.1uF,±20%,X5R,0402,SMD,TP
EMMC FLASH芯片,8GB,64Gb,MLC,V5.1,FBGA-153,SMD,TRAY,E08GDSGF1ABEN0,SCY

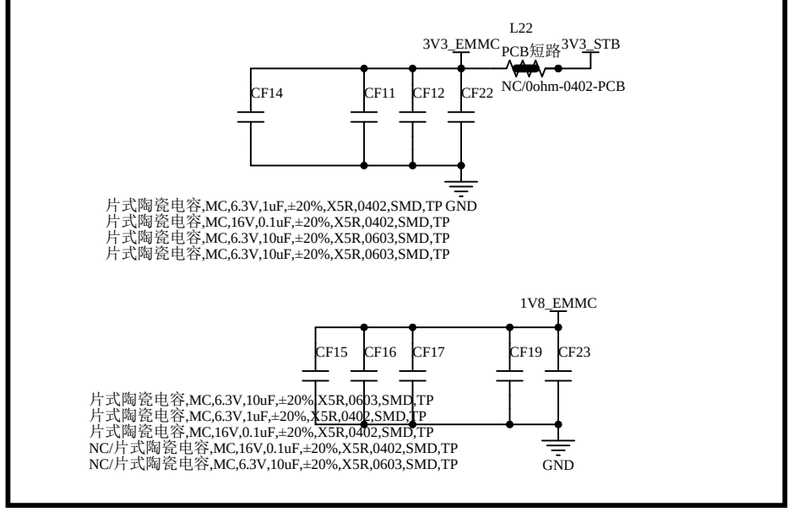
L22
3V3_EMMC
PCB短路
3V3_STB
NC/0ohm-0402-PCB
CF14
CF11
CF12
CF22
GND
片式陶瓷电容,MC,6.3V,1uF,±20%,X5R,0402,SMD,TP
片式陶瓷电容,MC,16V,0.1uF,±20%,X5R,0402,SMD,TP
片式陶瓷电容,MC,6.3V,10uF,±20%,X5R,0603,SMD,TP
片式陶瓷电容,MC,6.3V,10uF,±20%,X5R,0603,SMD,TP
1V8_EMMC
CF15
CF16
CF17
CF19
CF23
片式陶瓷电容,MC,6.3V,10uF,±20%,X5R,0603,SMD,TP
片式陶瓷电容,MC,6.3V,1uF,±20%,X5R,0402,SMD,TP
片式陶瓷电容,MC,16V,0.1uF,±20%,X5R,0402,SMD,TP
NC/片式陶瓷电容,MC,16V,0.1uF,±20%,X5R,0402,SMD,TP
NC/片式陶瓷电容,MC,6.3V,10uF,±20%,X5R,0603,SMD,TP
GND

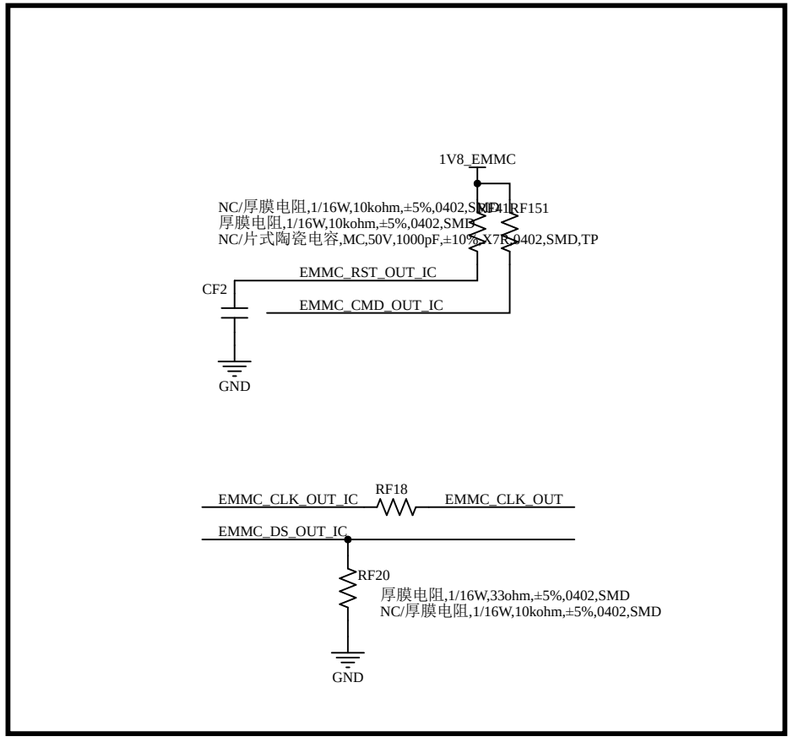
1V8_EMMC
NC/厚膜电阻,1/16W,10kohm,±5%,0402,SMD
RF151
厚膜电阻,1/16W,10kohm,±5%,0402,SMD
NC/片式陶瓷电容,MC,50V,1000pF,±10%,X7R,0402,SMD,TP
EMMC_RST_OUT_IC
CF2
EMMC_CMD_OUT_IC
GND
EMMC_CLK_OUT_IC
RF18
EMMC_CLK_OUT
EMMC_DS_OUT_IC
RF20
厚膜电阻,1/16W,33ohm,±5%,0402,SMD
NC/厚膜电阻,1/16W,10kohm,±5%,0402,SMD
GND

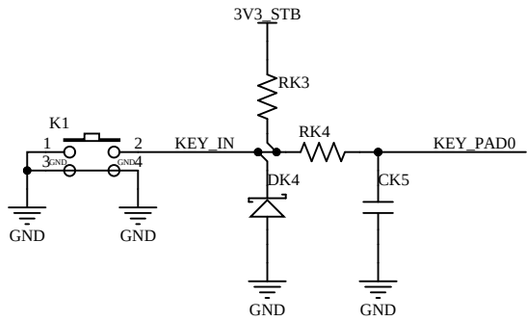

厚膜电阻,1/16W,4.7kohm,±5%,0402,SMD
片式陶瓷电容,MC,50V,0.01uF,±10%,X7R,0402,SMD,TP
厚膜电阻,1/16W,1kohm,±5%,0402,SMD
轻触开关,8×7.5×7mm,H,4Pin,180gf,±50gf,PIP,TS60DK80B18B271,HONGSUI
NC/小信号类TVS管,D,0.5pF,5.3V,0402,SMD,TP,AZ5325-01F.R7G,Amazing

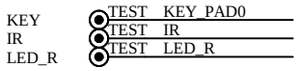

遥控接收头,2.7~5.5V,37.9KHz,6×5.2×5.45mm,DIP,BULK,S-RM331F-GC05-CK6,DC

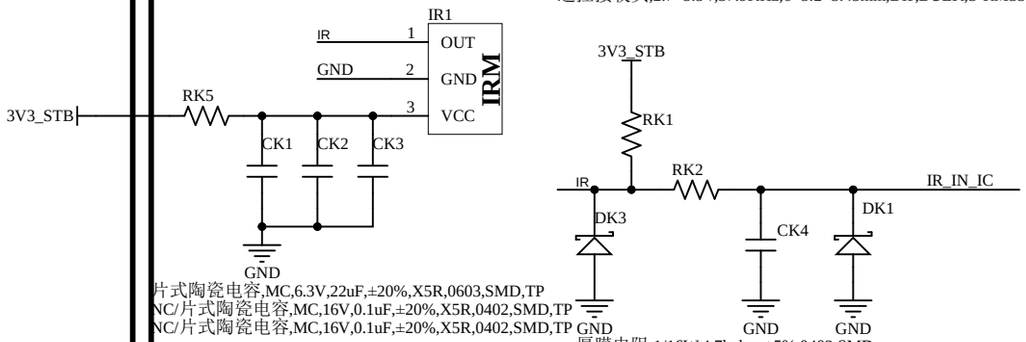

片式陶瓷电容,MC,6.3V,22uF,±20%,X5R,0603,SMD,TP
NC/片式陶瓷电容,MC,16V,0.1uF,±20%,X5R,0402,SMD,TP
NC/片式陶瓷电容,MC,16V,0.1uF,±20%,X5R,0402,SMD,TP

厚膜电阻,1/16W,100ohm,±5%,0402,SMD

厚膜电阻,1/16W,4.7kohm,±5%,0402,SMD
厚膜电阻,1/16W,100ohm,±5%,0402,SMD
片式陶瓷电容,MC,50V,22pF,±5%,NPO,0402,SMD,TP
NC/小信号类TVS管,D,0.5pF,5.3V,0402,SMD,TP,AZ5325-01F.R7G,Amazing
NC/小信号类TVS管,D,0.5pF,5.3V,0402,SMD,TP,AZ5325-01F.R7G,Amazing

NC/厚膜电阻,1/16W,10kohm,±5%,0402,SMD

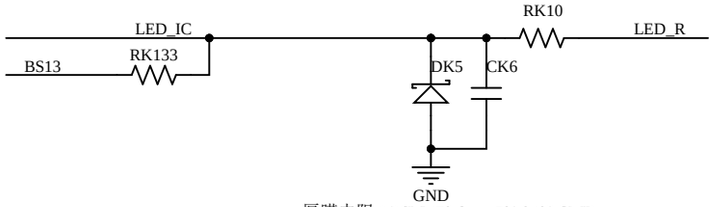

厚膜电阻,1/16W,470ohm,±5%,0402,SMD
NC/片式陶瓷电容,MC,16V,0.1uF,±20%,X5R,0402,SMD,TP
NC/小信号类TVS管,D,0.5pF,5.3V,0402,SMD,TP,AZ5325-01F.R7G,Amazing

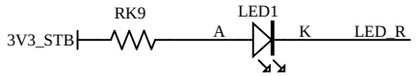

厚膜电阻,1/16W,20kohm,±1%,0402,SMD

贴片发光二极管,R,25mA,22.5~45mcd,SI,0603,SMD,TP,27-21/R6C-AM2N2LY/3C,侧贴,Everlight

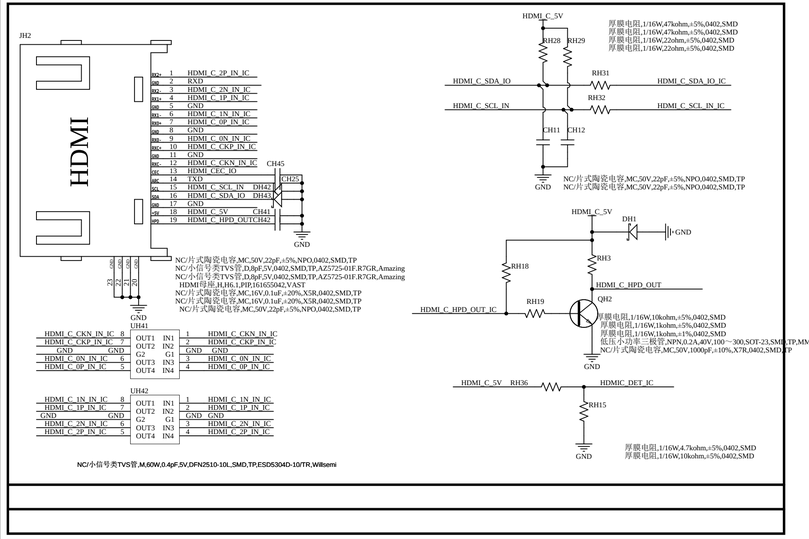
JH2
HDMI
HDMI_2P_IN_IC
RXD
HDMI_C_2N_IN_IC
HDMI_C_1P_IN_IC
GND
HDMI_C_1N_IN_IC
HDMI_C_0P_IN_IC
GND
HDMI_C_0N_IN_IC
HDMI_C_CKP_IN_IC
GND
HDMI_C_CKN_IN_IC
HDMI_CEC_IO
TXD
HDMI_C_SCL_IN
HDMI_C_SDA_IO
GND
HDMI_C_5V
HDMI_C_HPD_OUTC
CH45
CH25
DH42
DH43
CH41
DH42
GND
NC/片式陶瓷电容,MC,50V,22pF,±5%,NPO,0402,SMD,TP
NC/小信号类TVS管,D,8pF,5V,0402,SMD,TP,AZ5725-01F.R7GR,Amazing
NC/小信号类TVS管,D,8pF,5V,0402,SMD,TP,AZ5725-01F.R7GR,Amazing
HDMI母座,H,H6.1,PIP,161655042,VAST
NC/片式陶瓷电容,MC,16V,0.1uF,±20%,X5R,0402,SMD,TP
NC/片式陶瓷电容,MC,16V,0.1uF,±20%,X5R,0402,SMD,TP
NC/片式陶瓷电容,MC,50V,22pF,±5%,NPO,0402,SMD,TP
UH41
HDMI_C_CKN_IN_IC 8 OUT1 IN1 1 HDMI_C_CKN_IN_IC
HDMI_C_CKP_IN_IC 7 OUT2 IN2 2 HDMI_C_CKP_IN_IC
GND GND G2 G1 GND GND
HDMI_C_0N_IN_IC 6 OUT3 IN3 3 HDMI_C_0N_IN_IC
HDMI_C_0P_IN_IC 5 OUT4 IN4 4 HDMI_C_0P_IN_IC
UH42
HDMI_C_1N_IN_IC 8 OUT1 IN1 1 HDMI_C_1N_IN_IC
HDMI_C_1P_IN_IC 7 OUT2 IN2 2 HDMI_C_1P_IN_IC
GND GND G2 G1 GND GND
HDMI_C_2N_IN_IC 6 OUT3 IN3 3 HDMI_C_2N_IN_IC
HDMI_C_2P_IN_IC 5 OUT4 IN4 4 HDMI_C_2P_IN_IC
NC/小信号类TVS管,M,60W,0.4pF,5V,DFN2510-10L,SMD,TP,ESD5304D-10/TR,Willsemi
HDMI_C_5V
RH28 RH29
厚膜电阻,1/16W,47kohm,±5%,0402,SMD
厚膜电阻,1/16W,47kohm,±5%,0402,SMD
厚膜电阻,1/16W,22ohm,±5%,0402,SMD
厚膜电阻,1/16W,22ohm,±5%,0402,SMD
HDMI_C_SDA_IO
RH31
HDMI_C_SDA_IO_IC
HDMI_C_SCL_IN
RH32
HDMI_C_SCL_IN_IC
CH11 CH12
GND
NC/片式陶瓷电容,MC,50V,22pF,±5%,NPO,0402,SMD,TP
NC/片式陶瓷电容,MC,50V,22pF,±5%,NPO,0402,SMD,TP
HDMI_C_5V
DH1
GND
RH18
RH3
HDMI_C_HPD_OUT
HDMI_C_HPD_OUT_IC
RH19
QH2
厚膜电阻,1/16W,10kohm,±5%,0402,SMD
厚膜电阻,1/16W,1kohm,±5%,0402,SMD
厚膜电阻,1/16W,1kohm,±1%,0402,SMD
低压小功率三极管,NPN,0.2A,40V,100～300,SOT-23,SMD,TP,MMBT3904,JINGDAO
NC/片式陶瓷电容,MC,50V,1000pF,±10%,X7R,0402,SMD,TP
GND
HDMI_C_5V RH36 HDMIC_DET_IC
RH15
GND
厚膜电阻,1/16W,4.7kohm,±5%,0402,SMD
厚膜电阻,1/16W,10kohm,±5%,0402,SMD

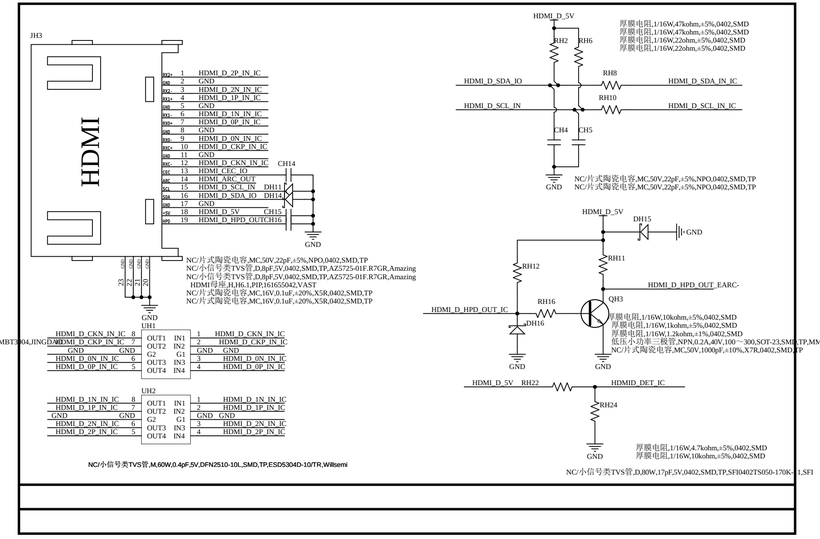
JH3
HDMI
HDMI_2P_IN_IC
GND
HDMI_D_2N_IN_IC
HDMI_D_1P_IN_IC
GND
HDMI_D_1N_IN_IC
HDMI_D_0P_IN_IC
GND
HDMI_D_0N_IN_IC
HDMI_D_CKP_IN_IC
GND
HDMI_D_CKN_IN_IC
HDMI_CEC_IO
HDMI_ARC_OUT
HDMI_D_SCL_IN_IC
HDMI_D_SDA_IO_IC
GND
HDMI_D_5V
HDMI_D_HPD_OUTCH16
CH14
DH14
CH15
DH11
GND
NC/片式陶瓷电容,MC,50V,22pF,±5%,NPO,0402,SMD,TP
NC/小信号类TVS管,D,8pF,5V,0402,SMD,TP,AZ5725-01F.R7GR,Amazing
NC/小信号类TVS管,D,8pF,5V,0402,SMD,TP,AZ5725-01F.R7GR,Amazing
HDMI母座,H,H6.1,PIP,161655042,VAST
NC/片式陶瓷电容,MC,16V,0.1uF,±20%,X5R,0402,SMD,TP
NC/片式陶瓷电容,MC,16V,0.1uF,±20%,X5R,0402,SMD,TP
UH1
HDMI_D_CKN_IN_IC 8 OUT1 IN1 1 HDMI_D_CKN_IN_IC
HDMI_D_CKP_IN_IC 7 OUT2 IN2 2 HDMI_D_CKP_IN_IC
GND GND G2 G1 GND GND
HDMI_D_0N_IN_IC 6 OUT3 IN3 3 HDMI_D_0N_IN_IC
HDMI_D_0P_IN_IC 5 OUT4 IN4 4 HDMI_D_0P_IN_IC
UH2
HDMI_D_1N_IN_IC 8 OUT1 IN1 1 HDMI_D_1N_IN_IC
HDMI_D_1P_IN_IC 7 OUT2 IN2 2 HDMI_D_1P_IN_IC
GND GND G2 G1 GND GND
HDMI_D_2N_IN_IC 6 OUT3 IN3 3 HDMI_D_2N_IN_IC
HDMI_D_2P_IN_IC 5 OUT4 IN4 4 HDMI_D_2P_IN_IC
NC/小信号类TVS管,M,60W,0.4pF,5V,DFN2510-10L,SMD,TP,ESD5304D-10/TR,Willsemi
HDMI_D_5V
RH2 RH6
厚膜电阻,1/16W,47kohm,±5%,0402,SMD
厚膜电阻,1/16W,47kohm,±5%,0402,SMD
厚膜电阻,1/16W,22ohm,±5%,0402,SMD
厚膜电阻,1/16W,22ohm,±5%,0402,SMD
HDMI_D_SDA_IO
RH8
HDMI_D_SDA_IN_IC
HDMI_D_SCL_IN
RH10
HDMI_D_SCL_IN_IC
CH4 CH5
GND
NC/片式陶瓷电容,MC,50V,22pF,±5%,NPO,0402,SMD,TP
NC/片式陶瓷电容,MC,50V,22pF,±5%,NPO,0402,SMD,TP
HDMI_D_5V
DH15
GND
RH12
RH11
HDMI_D_HPD_OUT_EARC-
HDMI_D_HPD_OUT_IC
RH16
QH3
DH16
厚膜电阻,1/16W,10kohm,±5%,0402,SMD
厚膜电阻,1/16W,1kohm,±5%,0402,SMD
厚膜电阻,1/16W,1.2kohm,±1%,0402,SMD
低压小功率三极管,NPN,0.2A,40V,100～300,SOT-23,SMD,TP,MMBT3904,JINGDAO
NC/片式陶瓷电容,MC,50V,1000pF,±10%,X7R,0402,SMD,TP
GND
HDMI_D_5V RH22 HDMID_DET_IC
RH24
GND
厚膜电阻,1/16W,4.7kohm,±5%,0402,SMD
厚膜电阻,1/16W,10kohm,±5%,0402,SMD
NC/小信号类TVS管,D,80W,17pF,5V,0402,SMD,TP,SFI0402TS050-170K-1,SFI

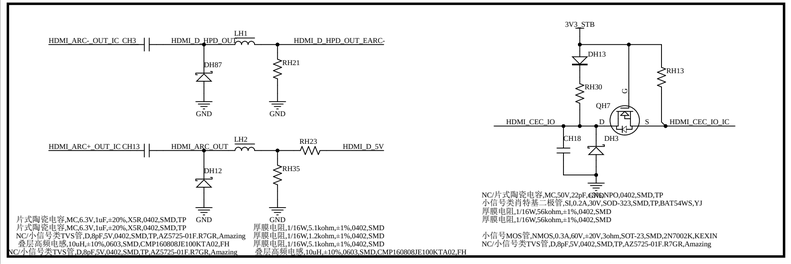
HDMI_ARC_OUT_IC CH3
HDMI_D_HPD_OUT
LH1
HDMI_D_HPD_OUT_EARC-
DH87
RH21
GND GND
HDMI_ARC+_OUT_IC CH13
HDMI_ARC_OUT
LH2
RH23
HDMI_D_5V
DH12
RH35
GND GND
片式陶瓷电容,MC,6.3V,1uF,±20%,X5R,0402,SMD,TP
片式陶瓷电容,MC,6.3V,1uF,±20%,X5R,0402,SMD,TP
NC/小信号类TVS管,D,8pF,5V,0402,SMD,TP,AZ5725-01F.R7GR,Amazing
叠层高频电感,10uH,±10%,0603,SMD,CMP160808JE100KTA02,FH
NC/小信号类TVS管,D,8pF,5V,0402,SMD,TP,AZ5725-01F.R7GR,Amazing
厚膜电阻,1/16W,5.1kohm,±1%,0402,SMD
厚膜电阻,1/16W,1.2kohm,±1%,0402,SMD
厚膜电阻,1/16W,5.1kohm,±1%,0402,SMD
叠层高频电感,10uH,±10%,0603,SMD,CMP160808JE100KTA02,FH
3V3_STB
DH13
RH13
RH30
G
QH7
D
S
HDMI_CEC_IO
HDMI_CEC_IO_IC
CH18
DH3
GND
NC/片式陶瓷电容,MC,50V,22pF,±5%,NPO,0402,SMD,TP
小信号类肖特基二极管,SL0.2A,30V,SOD-323,SMD,TP,BAT54WS,YJ
厚膜电阻,1/16W,56kohm,±1%,0402,SMD
厚膜电阻,1/16W,56kohm,±1%,0402,SMD
小信号MOS管,NMOS,0.3A,60V,±20V,3ohm,SOT-23,SMD,2N7002K,KEXIN
NC/小信号类TVS管,D,8pF,5V,0402,SMD,TP,AZ5725-01F.R7GR,Amazing

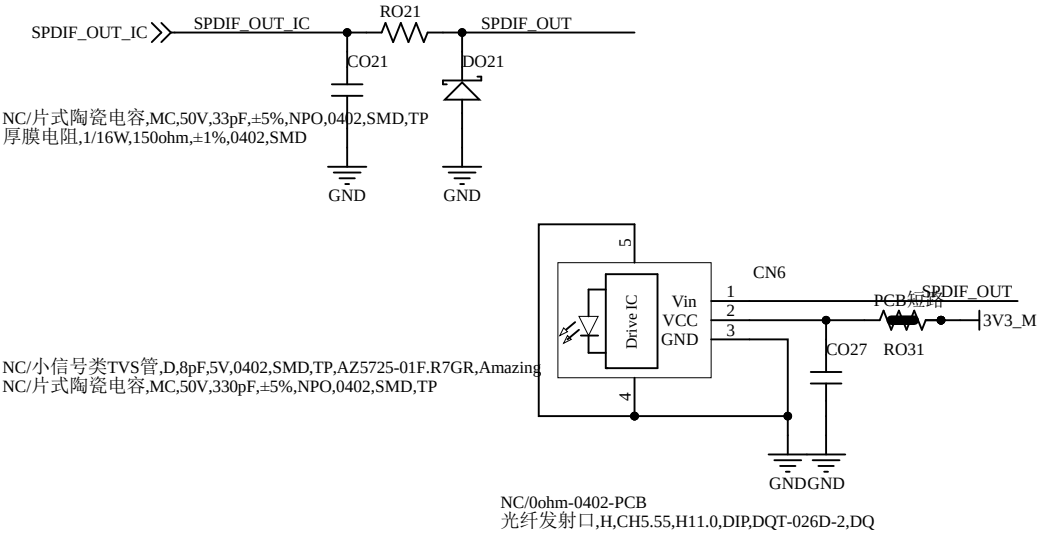
SPDIF_OUT_IC
SPDIF_OUT_IC
RO21
SPDIF_OUT
CO21
DO21
NC/片式陶瓷电容,MC,50V,33pF,±5%,NPO,0402,SMD,TP
厚膜电阻,1/16W,150ohm,±1%,0402,SMD
GND
GND
CN6
Drive IC
Vin
VCC
GND
PCB短路
SPDIF_OUT
3V3_M
CO27
RO31
NC/小信号类TVS管,D,8pF,5V,0402,SMD,TP,AZ5725-01F.R7GR,Amazing
NC/片式陶瓷电容,MC,50V,330pF,±5%,NPO,0402,SMD,TP
GNDGND
NC/0ohm-0402-PCB
光纤发射口,H,CH5.55,H11.0,DIP,DQT-026D-2,DQ

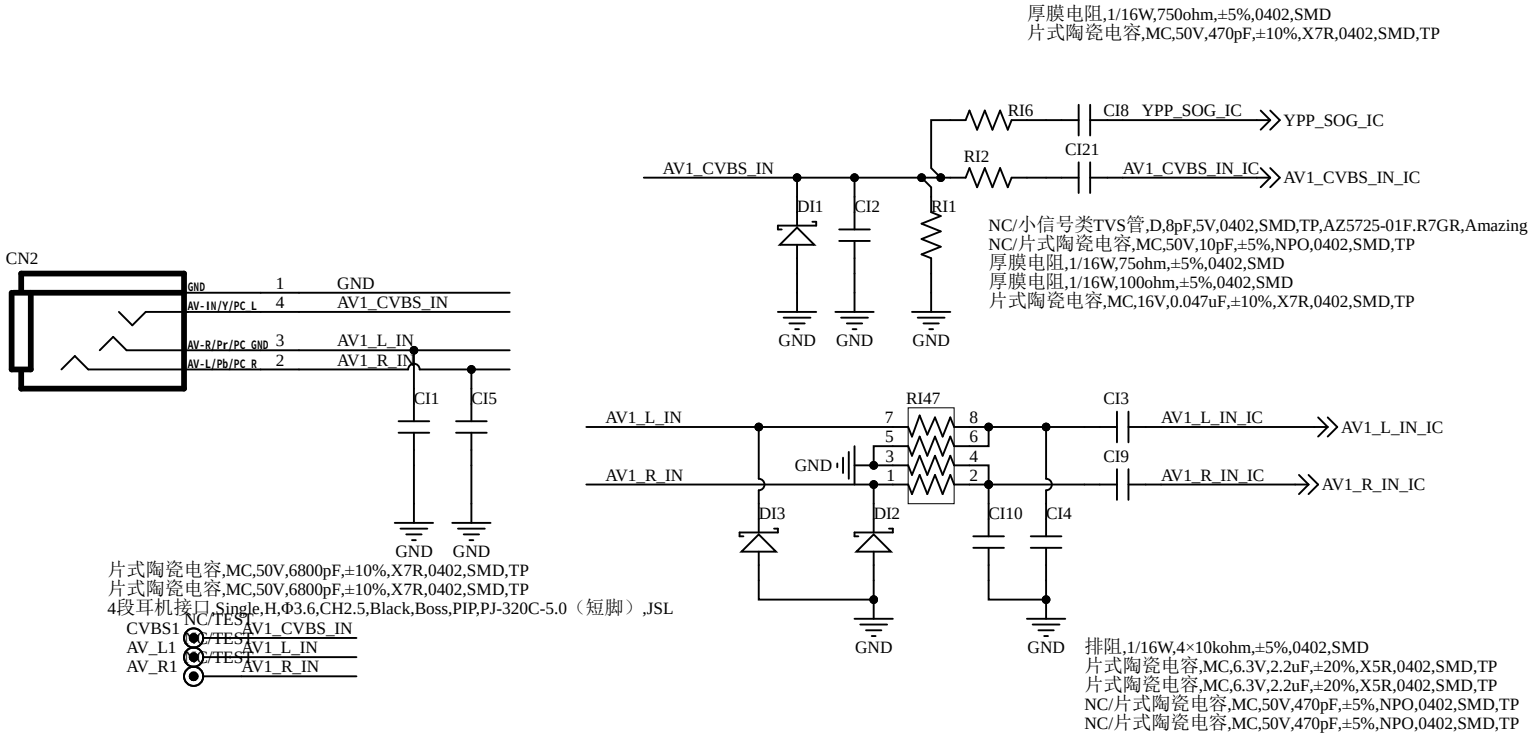
厚膜电阻,1/16W,750ohm,±5%,0402,SMD
片式陶瓷电容,MC,50V,470pF,±10%,X7R,0402,SMD,TP
RI6
CI8
YPP_SOG_IC
YPP_SOG_IC
RI2
CI21
AV1_CVBS_IN
AV1_CVBS_IN_IC
AV1_CVBS_IN_IC
DI1
CI2
RI1
NC/小信号类TVS管,D,8pF,5V,0402,SMD,TP,AZ5725-01F.R7GR,Amazing
NC/片式陶瓷电容,MC,50V,10pF,±5%,NPO,0402,SMD,TP
厚膜电阻,1/16W,75ohm,±5%,0402,SMD
厚膜电阻,1/16W,100ohm,±5%,0402,SMD
片式陶瓷电容,MC,16V,0.047uF,±10%,X7R,0402,SMD,TP
GND
GND
GND
CN2
GND
AV-IN/Y/PC L
AV-R/Pr/PC GND
AV-L/Pb/PC R
1 GND
4 AV1_CVBS_IN
3 AV1_L_IN
2 AV1_R_IN
CI1
CI5
GND
GND
RI47
AV1_L_IN
AV1_R_IN
GND
CI3
CI9
AV1_L_IN_IC
AV1_L_IN_IC
AV1_R_IN_IC
AV1_R_IN_IC
DI3
DI2
CI10
CI4
GND
GND
片式陶瓷电容,MC,50V,6800pF,±10%,X7R,0402,SMD,TP
片式陶瓷电容,MC,50V,6800pF,±10%,X7R,0402,SMD,TP
4段耳机接口,Single,H,Φ3.6,CH2.5,Black,Boss,PIP,PJ-320C-5.0（短脚）,JSL
CVBS1
AV_L1
AV_R1
NC/TEST
NC/TEST
NC/TEST
AV1_CVBS_IN
AV1_L_IN
AV1_R_IN
排阻,1/16W,4×10kohm,±5%,0402,SMD
片式陶瓷电容,MC,6.3V,2.2uF,±20%,X5R,0402,SMD,TP
片式陶瓷电容,MC,6.3V,2.2uF,±20%,X5R,0402,SMD,TP
NC/片式陶瓷电容,MC,50V,470pF,±5%,NPO,0402,SMD,TP
NC/片式陶瓷电容,MC,50V,470pF,±5%,NPO,0402,SMD,TP
NC/小信号类TVS管,D,8pF,5V,0402,SMD,TP,AZ5725-01F.R7GR,Amazing
NC/小信号类TVS管,D,8pF,5V,0402,SMD,TP,AZ5725-01F.R7GR,Amazing

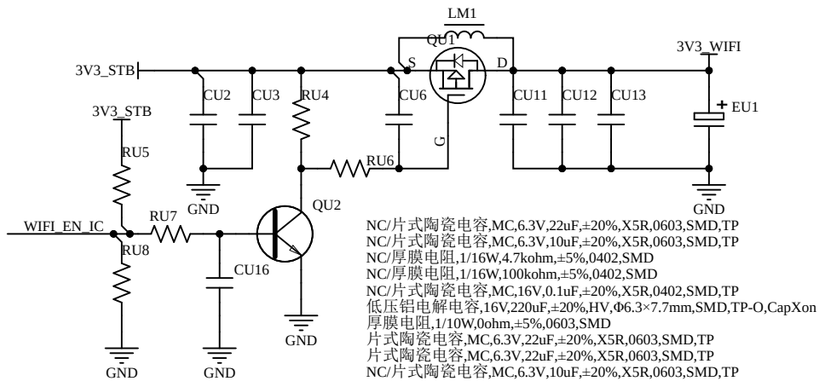

NC/片式陶瓷电容,MC,6.3V,22uF,±20%,X5R,0603,SMD,TP
NC/片式陶瓷电容,MC,6.3V,10uF,±20%,X5R,0603,SMD,TP
NC/厚膜电阻,1/16W,4.7kohm,±5%,0402,SMD
NC/厚膜电阻,1/16W,100kohm,±5%,0402,SMD
NC/片式陶瓷电容,MC,16V,0.1uF,±20%,X5R,0402,SMD,TP
低压铝电解电容,16V,220uF,±20%,HV,Φ6.3×7.7mm,SMD,TP-O,CapXon
厚膜电阻,1/10W,0ohm,±5%,0603,SMD
片式陶瓷电容,MC,6.3V,22uF,±20%,X5R,0603,SMD,TP
片式陶瓷电容,MC,6.3V,22uF,±20%,X5R,0603,SMD,TP
NC/片式陶瓷电容,MC,6.3V,10uF,±20%,X5R,0603,SMD,TP

NC/厚膜电阻,1/16W,4.7kohm,±5%,0402,SMD
NC/厚膜电阻,1/16W,4.7kohm,±5%,0402,SMD
NC/厚膜电阻,1/16W,10kohm,±5%,0402,SMD
NC/片式陶瓷电容,MC,16V,0.1uF,±20%,X5R,0402,SMD,TP
NC/低压小功率三极管,NPN,0.2A,40V,100～300,SOT-23,SMD,TP,MMBT3904,JINGDAO
NC/低压功率MOS管,PMOS,-4.2A,-30V,±12V,48mohm,SOT-23-3L,SMD,WM03P42M2,WAYON

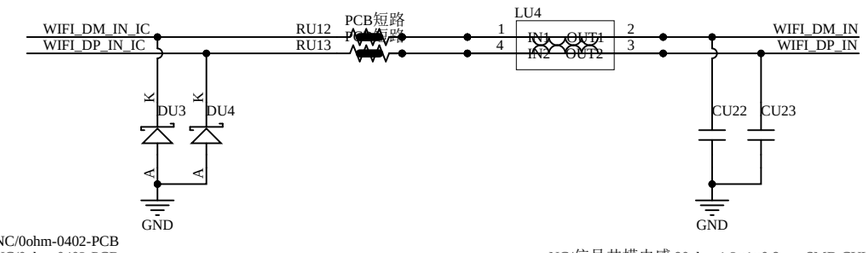

NC/0ohm-0402-PCB
NC/0ohm-0402-PCB
NC/小信号类TVS管,D,0.5pF,5.3V,0402,SMD,TP,AZ5325-01F.R7G,Amazing
NC/小信号类TVS管,D,0.5pF,5.3V,0402,SMD,TP,AZ5325-01F.R7G,Amazing

NC/信号共模电感,90ohm,1.2×1×0.8mm,SMD,CUWI11T-900Y-N,CHILISIN
NC/片式陶瓷电容,MC,50V,2pF,±0.25pF,NPO,0402,SMD,TP
NC/片式陶瓷电容,MC,50V,2pF,±0.25pF,NPO,0402,SMD,TP

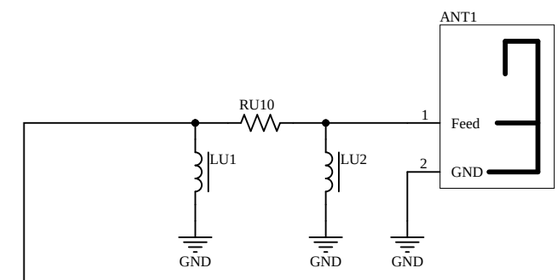

NC/厚膜电阻,1/16W,0ohm,±5%,0402,SMD
NC/厚膜电阻,1/16W,0ohm,±5%,0402,SMD
厚膜电阻,1/16W,0ohm,±5%,0402,SMD

NC/

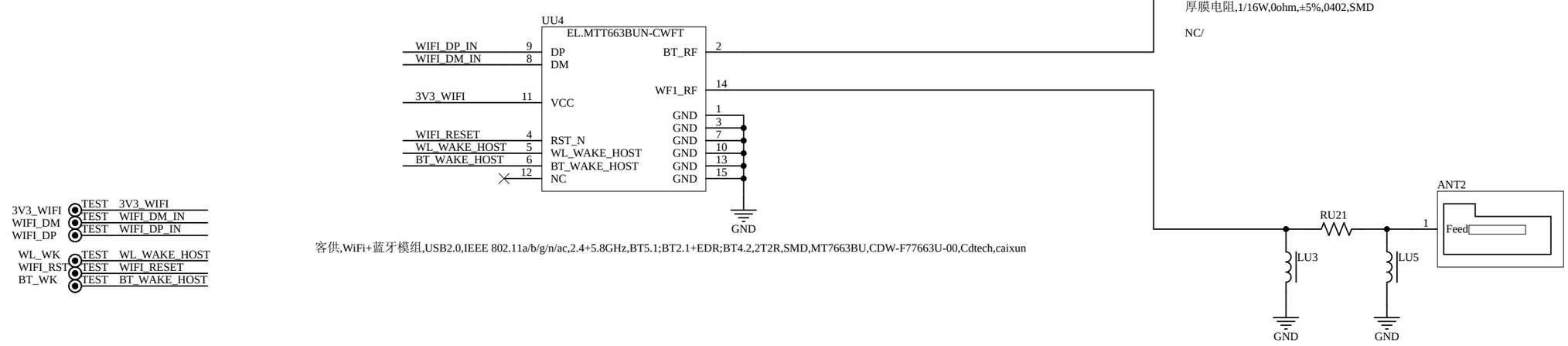

客供,WiFi+蓝牙模组,USB2.0,IEEE 802.11a/b/g/n/ac,2.4+5.8GHz,BT5.1;BT2.1+EDR;BT4.2,2T2R,SMD,MT7663BU,CDW-F77663U-00,Cdtech,caixun

NC/厚膜电阻,1/16W,0ohm,±5%,0402,SMD
NC/厚膜电阻,1/16W,0ohm,±5%,0402,SMD
厚膜电阻,1/16W,0ohm,±5%,0402,SMD

NC/

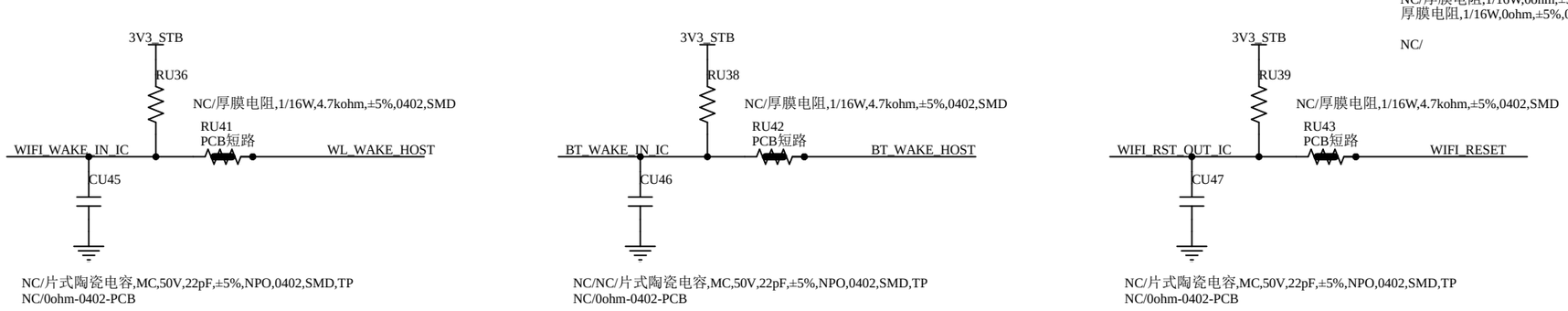

NC/片式陶瓷电容,MC,50V,22pF,±5%,NPO,0402,SMD,TP
NC/0ohm-0402-PCB

NC/NC/片式陶瓷电容,MC,50V,22pF,±5%,NPO,0402,SMD,TP
NC/0ohm-0402-PCB

NC/片式陶瓷电容,MC,50V,22pF,±5%,NPO,0402,SMD,TP
NC/0ohm-0402-PCB

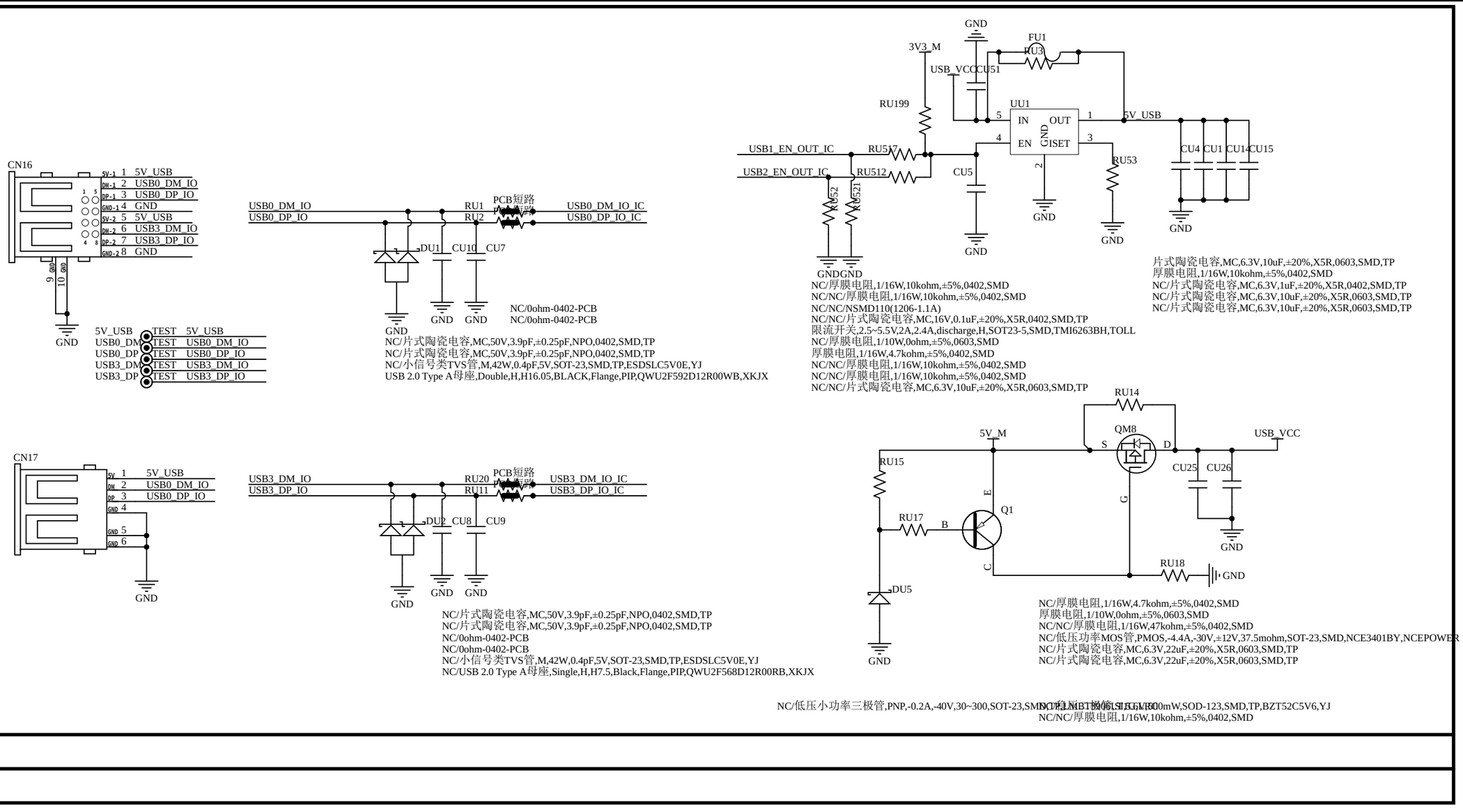

NC/0ohm-0402-PCB
NC/0ohm-0402-PCB
NC/片式陶瓷电容,MC,50V,3.9pF,±0.25pF,NPO,0402,SMD,TP
NC/片式陶瓷电容,MC,50V,3.9pF,±0.25pF,NPO,0402,SMD,TP
NC/小信号类TVS管,M,42W,0.4pF,5V,SOT-23,SMD,TP,ESDSLC5V0E,YJ
USB 2.0 Type A母座,Double,H,H16.05,BLACK,Flange,PIP,QWU2F592D12R00WB,XKJX

NC/厚膜电阻,1/16W,10kohm,±5%,0402,SMD
NC/NC/厚膜电阻,1/16W,10kohm,±5%,0402,SMD
NC/NC/NSMD110(1206-1.1A)
NC/NC/片式陶瓷电容,MC,16V,0.1uF,±20%,X5R,0402,SMD,TP
限流开关,2.5~5.5V,2A,2.4A,discharge,H,SOT23-5,SMD,TMI6263BH,TOLL
NC/厚膜电阻,1/10W,0ohm,±5%,0603,SMD
厚膜电阻,1/16W,4.7kohm,±5%,0402,SMD
NC/NC/厚膜电阻,1/16W,10kohm,±5%,0402,SMD
NC/NC/厚膜电阻,1/16W,10kohm,±5%,0402,SMD
NC/NC/片式陶瓷电容,MC,6.3V,10uF,±20%,X5R,0603,SMD,TP

片式陶瓷电容,MC,6.3V,10uF,±20%,X5R,0603,SMD,TP
厚膜电阻,1/16W,10kohm,±5%,0402,SMD
NC/片式陶瓷电容,MC,6.3V,1uF,±20%,X5R,0402,SMD,TP
NC/片式陶瓷电容,MC,6.3V,10uF,±20%,X5R,0603,SMD,TP
NC/片式陶瓷电容,MC,6.3V,10uF,±20%,X5R,0603,SMD,TP

NC/厚膜电阻,1/16W,4.7kohm,±5%,0402,SMD
厚膜电阻,1/10W,0ohm,±5%,0603,SMD
NC/NC/厚膜电阻,1/16W,47kohm,±5%,0402,SMD
NC/低压功率MOS管,PMOS,-4.4A,-30V,±12V,37.5mohm,SOT-23,SMD,NCE3401BY,NCEPOWER
NC/片式陶瓷电容,MC,6.3V,22uF,±20%,X5R,0603,SMD,TP
NC/片式陶瓷电容,MC,6.3V,22uF,±20%,X5R,0603,SMD,TP

NC/低压小功率三极管,PNP,-0.2A,-40V,30~300,SOT-23,SMD,TP,MMBT3906,JINGDAO
NC/稳压二极管,5.6V,500mW,SOD-123,SMD,TP,BZT52C5V6,YJ
NC/NC/厚膜电阻,1/16W,10kohm,±5%,0402,SMD

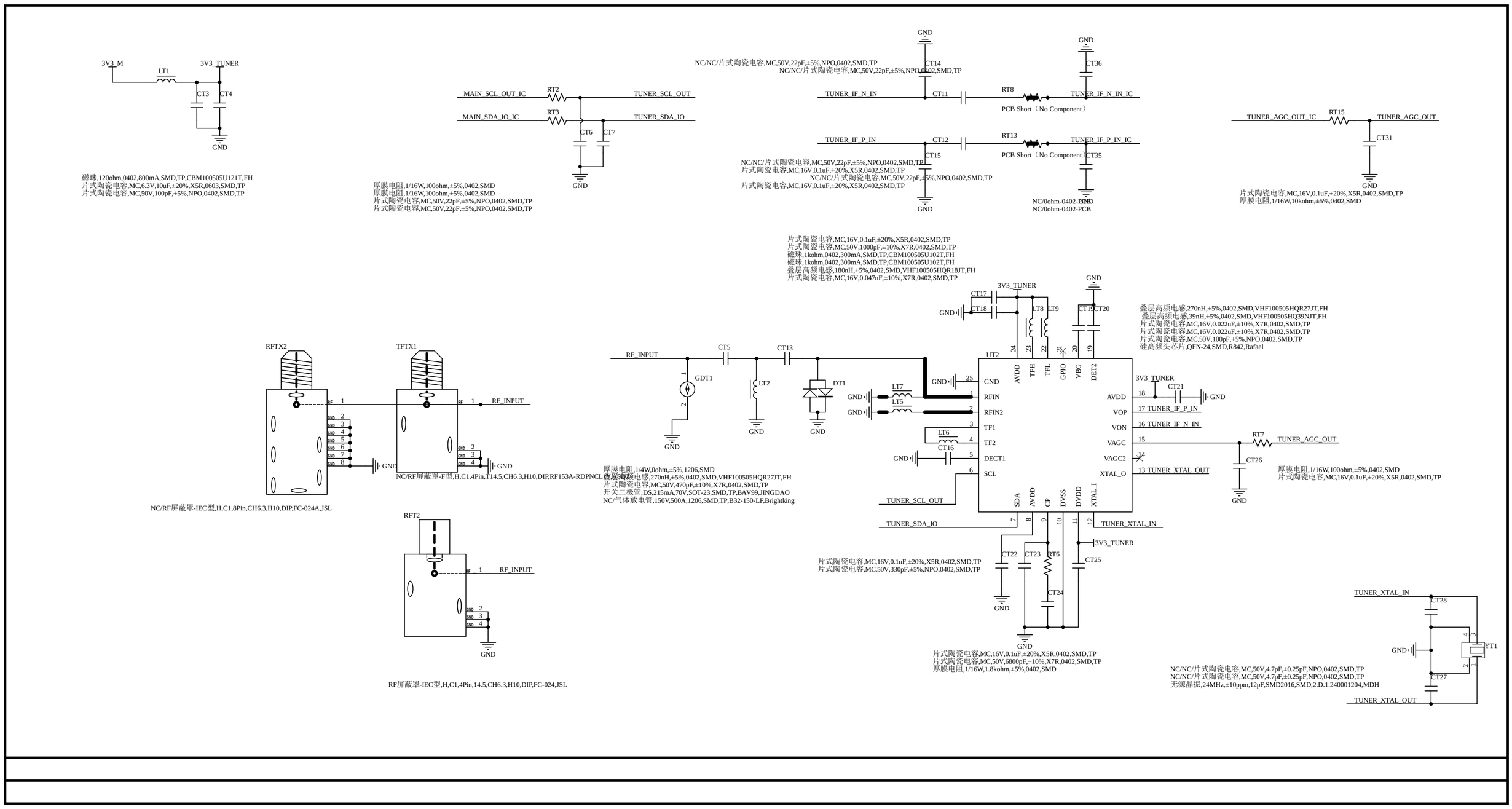
3V3_M
LT1
3V3_TUNER
CT3
CT4
GND
磁珠,120ohm,0402,800mA,SMD,TP,CBM100505U121T,FH
片式陶瓷电容,MC,6.3V,10uF,±20%,X5R,0603,SMD,TP
片式陶瓷电容,MC,50V,100pF,±5%,NPO,0402,SMD,TP
MAIN_SCL_OUT_IC
RT2
TUNER_SCL_OUT
MAIN_SDA_IO_IC
RT3
TUNER_SDA_IO
CT6
CT7
厚膜电阻,1/16W,100ohm,±5%,0402,SMD
厚膜电阻,1/16W,100ohm,±5%,0402,SMD
片式陶瓷电容,MC,50V,22pF,±5%,NPO,0402,SMD,TP
片式陶瓷电容,MC,50V,22pF,±5%,NPO,0402,SMD,TP
NC/NC/片式陶瓷电容,MC,50V,22pF,±5%,NPO,0402,SMD,TP
NC/NC/片式陶瓷电容,MC,50V,22pF,±5%,NPO,0402,SMD,TP
CT14
TUNER_IF_N_IN
CT11
RT8
CT36
TUNER_IF_N_IN_IC
PCB Short（No Component）
TUNER_IF_P_IN
CT12
RT13
TUNER_IF_P_IN_IC
CT35
CT15
片式陶瓷电容,MC,16V,0.1uF,±20%,X5R,0402,SMD,TP
NC/0ohm-0402-PCB
NC/0ohm-0402-PCB
TUNER_AGC_OUT_IC
RT15
TUNER_AGC_OUT
CT31
片式陶瓷电容,MC,16V,0.1uF,±20%,X5R,0402,SMD,TP
厚膜电阻,1/16W,10kohm,±5%,0402,SMD
片式陶瓷电容,MC,16V,0.1uF,±20%,X5R,0402,SMD,TP
片式陶瓷电容,MC,50V,1000pF,±10%,X7R,0402,SMD,TP
磁珠,1kohm,0402,300mA,SMD,TP,CBM100505U102T,FH
磁珠,1kohm,0402,300mA,SMD,TP,CBM100505U102T,FH
叠层高频电感,180nH,±5%,0402,SMD,VHF100505HQR18JT,FH
片式陶瓷电容,MC,16V,0.047uF,±10%,X7R,0402,SMD,TP
3V3_TUNER
CT17
CT18
LT8
LT9
CT19
CT20
叠层高频电感,270nH,±5%,0402,SMD,VHF100505HQR27JT,FH
叠层高频电感,39nH,±5%,0402,SMD,VHF100505HQ39NJT,FH
片式陶瓷电容,MC,16V,0.022uF,±10%,X7R,0402,SMD,TP
片式陶瓷电容,MC,16V,0.022uF,±10%,X7R,0402,SMD,TP
片式陶瓷电容,MC,50V,100pF,±5%,NPO,0402,SMD,TP
硅高频头芯片,QFN-24,SMD,R842,Rafael
RFTX2
TFTX1
RF_INPUT
GND
NC/RF屏蔽罩-IEC型,H,C1,8Pin,CH6.3,H10,DIP,FC-024A,JSL
NC/RF屏蔽罩-F型,H,C1,4Pin,114.5,CH6.3,H10,DIP,RF153A-RDPNCL1Y,ASDZ
RF_INPUT
CT5
CT13
GDT1
LT2
DT1
LT7
LT5
UT2
GND
RFIN
RFIN2
TF1
TF2
DECT1
SCL
AVDD
TFH
TFL
GPIO
VBG
DET2
VOP
VON
VAGC
VAGC2
XTAL_O
XTAL_I
DVDD
DVSS
CP
SDA
LT6
CT16
TUNER_SCL_OUT
TUNER_SDA_IO
TUNER_XTAL_IN
TUNER_XTAL_OUT
RT7
CT26
厚膜电阻,1/16W,100ohm,±5%,0402,SMD
片式陶瓷电容,MC,16V,0.1uF,±20%,X5R,0402,SMD,TP
厚膜电阻,1/4W,0ohm,±5%,1206,SMD
叠层高频电感,270nH,±5%,0402,SMD,VHF100505HQR27JT,FH
片式陶瓷电容,MC,50V,470pF,±10%,X7R,0402,SMD,TP
开关二极管,DS,215mA,70V,SOT-23,SMD,TP,BAV99,JINGDAO
NC/气体放电管,150V,500A,1206,SMD,TP,B32-150-LF,Brightking
RFT2
RF_INPUT
RF屏蔽罩-IEC型,H,C1,4Pin,14.5,CH6.3,H10,DIP,FC-024,JSL
CT22
CT23
RT6
CT24
CT25
片式陶瓷电容,MC,16V,0.1uF,±20%,X5R,0402,SMD,TP
片式陶瓷电容,MC,50V,330pF,±5%,NPO,0402,SMD,TP
片式陶瓷电容,MC,16V,0.1uF,±20%,X5R,0402,SMD,TP
片式陶瓷电容,MC,50V,6800pF,±10%,X7R,0402,SMD,TP
厚膜电阻,1/16W,1.8kohm,±5%,0402,SMD
TUNER_XTAL_IN
CT28
YT1
CT27
TUNER_XTAL_OUT
NC/NC/片式陶瓷电容,MC,50V,4.7pF,±0.25pF,NPO,0402,SMD,TP
NC/NC/片式陶瓷电容,MC,50V,4.7pF,±0.25pF,NPO,0402,SMD,TP
无源晶振,24MHz,±10ppm,12pF,SMD2016,SMD,2.D.1.240001204,MDH

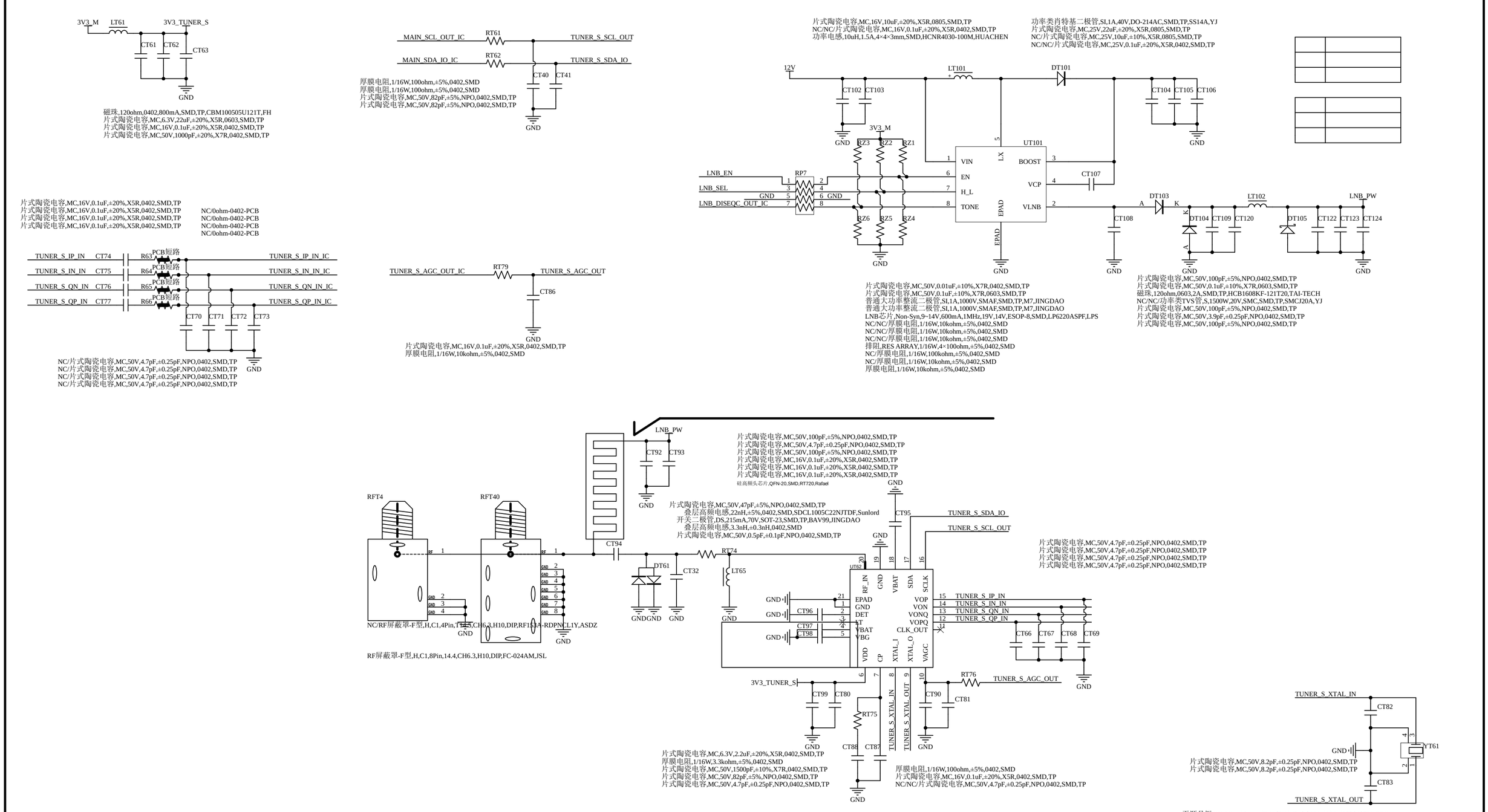
3V3_M
LT61
3V3_TUNER_S
CT61
CT62
CT63
GND
磁珠,120ohm,0402,800mA,SMD,TP,CBM100505U121T,FH
片式陶瓷电容,MC,6.3V,22uF,±20%,X5R,0603,SMD,TP
片式陶瓷电容,MC,16V,0.1uF,±20%,X5R,0402,SMD,TP
片式陶瓷电容,MC,50V,1000pF,±20%,X7R,0402,SMD,TP
MAIN_SCL_OUT_IC
RT61
TUNER_S_SCL_OUT
MAIN_SDA_IO_IC
RT62
TUNER_S_SDA_IO
CT40
CT41
厚膜电阻,1/16W,100ohm,±5%,0402,SMD
厚膜电阻,1/16W,100ohm,±5%,0402,SMD
片式陶瓷电容,MC,50V,82pF,±5%,NPO,0402,SMD,TP
片式陶瓷电容,MC,50V,82pF,±5%,NPO,0402,SMD,TP
片式陶瓷电容,MC,16V,10uF,±20%,X5R,0805,SMD,TP
NC/NC/片式陶瓷电容,MC,16V,0.1uF,±20%,X5R,0402,SMD,TP
功率电感,10uH,1.5A,4×4×3mm,SMD,HCNR4030-100M,HUACHEN
功率类肖特基二极管,SI,1A,40V,DO-214AC,SMD,TP,SS14A,YJ
片式陶瓷电容,MC,25V,22uF,±20%,X5R,0805,SMD,TP
NC/片式陶瓷电容,MC,25V,10uF,±10%,X5R,0805,SMD,TP
NC/NC/片式陶瓷电容,MC,25V,0.1uF,±20%,X5R,0402,SMD,TP
12V
LT101
DT101
CT102
CT103
CT104
CT105
CT106
3V3_M
RZ3
RZ2
RZ1
UT101
VIN
EN
H_L
TONE
LX
BOOST
VCP
VLNB
EPAD
CT107
LNB_EN
LNB_SEL
LNB_DISEQC_OUT_IC
RP7
RZ6
RZ5
RZ4
DT103
LT102
LNB_PW
CT108
DT104
CT109
CT120
DT105
CT122
CT123
CT124
片式陶瓷电容,MC,16V,0.1uF,±20%,X5R,0402,SMD,TP
片式陶瓷电容,MC,16V,0.1uF,±20%,X5R,0402,SMD,TP
片式陶瓷电容,MC,16V,0.1uF,±20%,X5R,0402,SMD,TP
片式陶瓷电容,MC,16V,0.1uF,±20%,X5R,0402,SMD,TP
NC/0ohm-0402-PCB
NC/0ohm-0402-PCB
NC/0ohm-0402-PCB
NC/0ohm-0402-PCB
TUNER_S_IP_IN
CT74
R63
PCB短路
TUNER_S_IP_IN_IC
TUNER_S_IN_IN
CT75
R64
TUNER_S_IN_IN_IC
TUNER_S_QN_IN
CT76
R65
TUNER_S_QN_IN_IC
TUNER_S_QP_IN
CT77
R66
TUNER_S_QP_IN_IC
CT70
CT71
CT72
CT73
NC/片式陶瓷电容,MC,50V,4.7pF,±0.25pF,NPO,0402,SMD,TP
NC/片式陶瓷电容,MC,50V,4.7pF,±0.25pF,NPO,0402,SMD,TP
NC/片式陶瓷电容,MC,50V,4.7pF,±0.25pF,NPO,0402,SMD,TP
NC/片式陶瓷电容,MC,50V,4.7pF,±0.25pF,NPO,0402,SMD,TP
TUNER_S_AGC_OUT_IC
RT79
TUNER_S_AGC_OUT
CT86
片式陶瓷电容,MC,16V,0.1uF,±20%,X5R,0402,SMD,TP
厚膜电阻,1/16W,10kohm,±5%,0402,SMD
片式陶瓷电容,MC,50V,0.01uF,±10%,X7R,0402,SMD,TP
片式陶瓷电容,MC,50V,0.1uF,±10%,X7R,0603,SMD,TP
普通大功率整流二极管,SI,1A,1000V,SMAF,SMD,TP,M7,JINGDAO
普通大功率整流二极管,SI,1A,1000V,SMAF,SMD,TP,M7,JINGDAO
LNB芯片,Non-Syn,9~14V,600mA,1MHz,19V,14V,ESOP-8,SMD,LP6220ASPF,LPS
NC/NC/厚膜电阻,1/16W,10kohm,±5%,0402,SMD
NC/NC/厚膜电阻,1/16W,10kohm,±5%,0402,SMD
NC/NC/厚膜电阻,1/16W,10kohm,±5%,0402,SMD
排阻,RES ARRAY,1/16W,4×100ohm,±5%,0402,SMD
NC/厚膜电阻,1/16W,100kohm,±5%,0402,SMD
NC/厚膜电阻,1/16W,10kohm,±5%,0402,SMD
厚膜电阻,1/16W,10kohm,±5%,0402,SMD
片式陶瓷电容,MC,50V,100pF,±5%,NPO,0402,SMD,TP
片式陶瓷电容,MC,50V,0.1uF,±10%,X7R,0603,SMD,TP
磁珠,120ohm,0603,2A,SMD,TP,HCB1608KF-121T20,TAI-TECH
NC/NC/功率类TVS管,S,1500W,20V,SMC,SMD,TP,SMCJ20A,YJ
片式陶瓷电容,MC,50V,100pF,±5%,NPO,0402,SMD,TP
片式陶瓷电容,MC,50V,3.9pF,±0.25pF,NPO,0402,SMD,TP
片式陶瓷电容,MC,50V,100pF,±5%,NPO,0402,SMD,TP
LNB_PW
CT92
CT93
片式陶瓷电容,MC,50V,100pF,±5%,NPO,0402,SMD,TP
片式陶瓷电容,MC,50V,4.7pF,±0.25pF,NPO,0402,SMD,TP
片式陶瓷电容,MC,50V,100pF,±5%,NPO,0402,SMD,TP
片式陶瓷电容,MC,16V,0.1uF,±20%,X5R,0402,SMD,TP
片式陶瓷电容,MC,16V,0.1uF,±20%,X5R,0402,SMD,TP
片式陶瓷电容,MC,16V,0.1uF,±20%,X5R,0402,SMD,TP
硅高频头芯片,QFN-20,SMD,RT720,Rafael
RFT4
RFT40
片式陶瓷电容,MC,50V,47pF,±5%,NPO,0402,SMD,TP
叠层高频电感,22nH,±5%,0402,SMD,SDCL1005C22NJTDF,Sunlord
开关二极管,DS,215mA,70V,SOT-23,SMD,TP,BAV99,JINGDAO
叠层高频电感,3.3nH,±0.3nH,0402,SMD
片式陶瓷电容,MC,50V,0.5pF,±0.1pF,NPO,0402,SMD,TP
CT94
DT61
CT32
RT74
LT65
CT95
TUNER_S_SDA_IO
TUNER_S_SCL_OUT
UT62
RF_IN
GND
VBAT
SDA
SCLK
EPAD
DET
XT
YBAT
YBG
VOP
VON
VONQ
VOPQ
CLK_OUT
VDD
CP
XTAL_I
XTAL_O
VAGC
CT96
CT97
CT98
TUNER_S_IP_IN
TUNER_S_IN_IN
TUNER_S_QN_IN
TUNER_S_QP_IN
CT66
CT67
CT68
CT69
片式陶瓷电容,MC,50V,4.7pF,±0.25pF,NPO,0402,SMD,TP
片式陶瓷电容,MC,50V,4.7pF,±0.25pF,NPO,0402,SMD,TP
片式陶瓷电容,MC,50V,4.7pF,±0.25pF,NPO,0402,SMD,TP
片式陶瓷电容,MC,50V,4.7pF,±0.25pF,NPO,0402,SMD,TP
NC/RF屏蔽罩-F型,H,C1,4Pin,114.5,CH6.3,H10,DIP,RF153A-RDPNCL1Y,ASDZ
RF屏蔽罩-F型,H,C1,8Pin,14.4,CH6.3,H10,DIP,FC-024AM,JSL
3V3_TUNER_S
CT99
CT80
RT75
CT88
CT87
RT76
TUNER_S_AGC_OUT
CT90
CT81
TUNER_S_XTAL_IN
TUNER_S_XTAL_OUT
片式陶瓷电容,MC,6.3V,2.2uF,±20%,X5R,0402,SMD,TP
厚膜电阻,1/16W,3.3kohm,±5%,0402,SMD
片式陶瓷电容,MC,50V,1500pF,±10%,X7R,0402,SMD,TP
片式陶瓷电容,MC,50V,82pF,±5%,NPO,0402,SMD,TP
片式陶瓷电容,MC,50V,4.7pF,±0.25pF,NPO,0402,SMD,TP
厚膜电阻,1/16W,100ohm,±5%,0402,SMD
片式陶瓷电容,MC,16V,0.1uF,±20%,X5R,0402,SMD,TP
NC/NC/片式陶瓷电容,MC,50V,4.7pF,±0.25pF,NPO,0402,SMD,TP
TUNER_S_XTAL_IN
CT82
YT61
CT83
TUNER_S_XTAL_OUT
片式陶瓷电容,MC,50V,8.2pF,±0.25pF,NPO,0402,SMD,TP
片式陶瓷电容,MC,50V,8.2pF,±0.25pF,NPO,0402,SMD,TP
无源晶振,27MHz,±10ppm,20pF,SMD2016,SMD,2.D.1.270002002,MDH

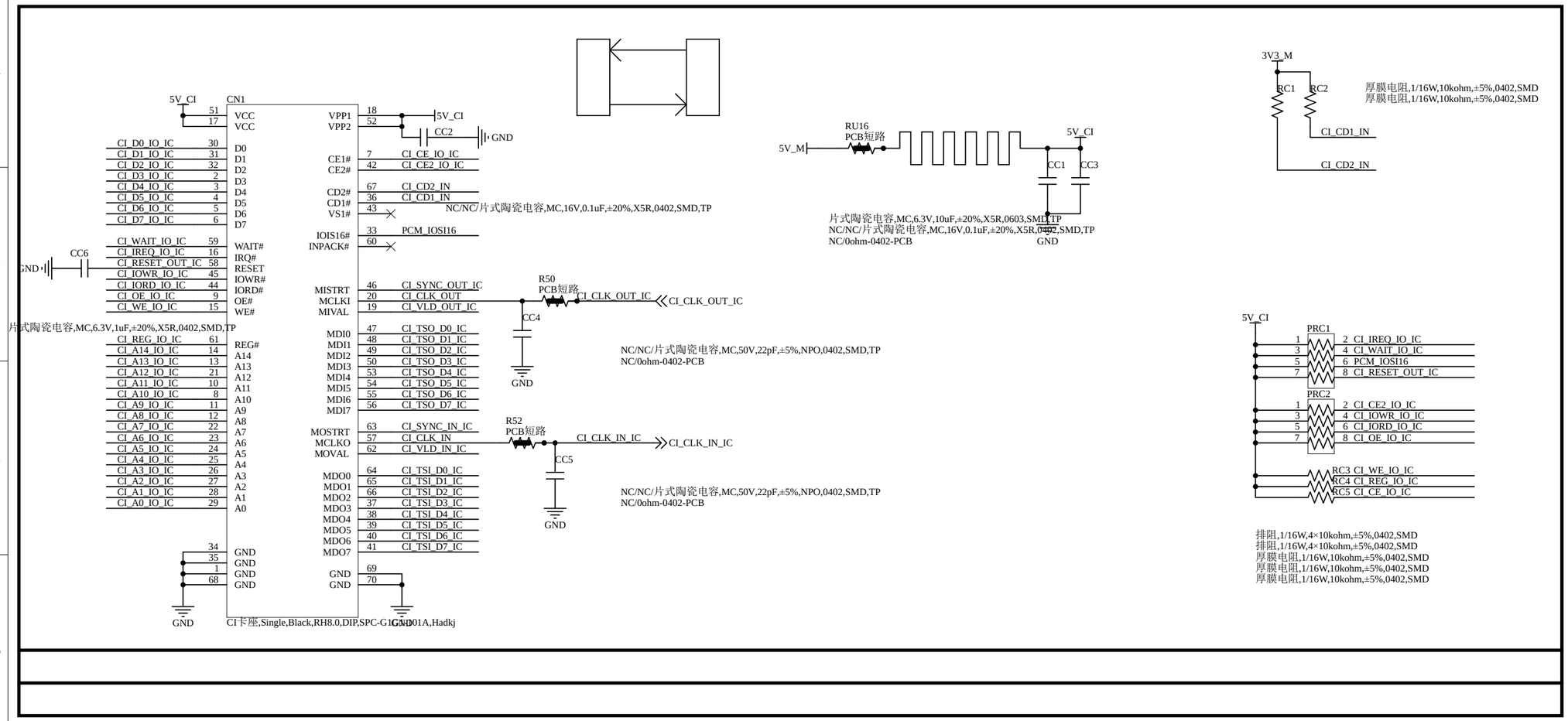
CN1
5V_CI
VCC 51
VCC 17
CI_D0_IO_IC 30 D0
CI_D1_IO_IC 31 D1
CI_D2_IO_IC 32 D2
CI_D3_IO_IC 2 D3
CI_D4_IO_IC 3 D4
CI_D5_IO_IC 4 D5
CI_D6_IO_IC 5 D6
CI_D7_IO_IC 6 D7
CI_WAIT_IO_IC 59 WAIT#
CI_IREQ_IO_IC 16 IRQ#
CI_RESET_OUT_IC 58 RESET
CI_IOWR_IO_IC 45 IOWR#
CI_IORD_IO_IC 44 IORD#
CI_OE_IO_IC 9 OE#
CI_WE_IO_IC 15 WE#
CC6
GND
片式陶瓷电容,MC,6.3V,1uF,±20%,X5R,0402,SMD,TP
CI_REG_IO_IC 61 REG#
CI_A14_IO_IC 14 A14
CI_A13_IO_IC 13 A13
CI_A12_IO_IC 21 A12
CI_A11_IO_IC 10 A11
CI_A10_IO_IC 8 A10
CI_A9_IO_IC 11 A9
CI_A8_IO_IC 12 A8
CI_A7_IO_IC 22 A7
CI_A6_IO_IC 23 A6
CI_A5_IO_IC 24 A5
CI_A4_IO_IC 25 A4
CI_A3_IO_IC 26 A3
CI_A2_IO_IC 27 A2
CI_A1_IO_IC 28 A1
CI_A0_IO_IC 29 A0
34 GND
35 GND
1 GND
68 GND
GND
VPP1 18
VPP2 52
5V_CI
CC2
GND
CE1# 7 CI_CE_IO_IC
CE2# 42 CI_CE2_IO_IC
CD2# 67 CI_CD2_IN
CD1# 36 CI_CD1_IN
VS1# 43
NC/NC/片式陶瓷电容,MC,16V,0.1uF,±20%,X5R,0402,SMD,TP
IOIS16# 33 PCM_IOSI16
INPACK# 60
MISTRT 46 CI_SYNC_OUT_IC
MCLKI 20 CI_CLK_OUT
MIVAL 19 CI_VLD_OUT_IC
MDI0 47 CI_TSO_D0_IC
MDI1 48 CI_TSO_D1_IC
MDI2 49 CI_TSO_D2_IC
MDI3 50 CI_TSO_D3_IC
MDI4 53 CI_TSO_D4_IC
MDI5 54 CI_TSO_D5_IC
MDI6 55 CI_TSO_D6_IC
MDI7 56 CI_TSO_D7_IC
MOSTRT 63 CI_SYNC_IN_IC
MCLKO 57 CI_CLK_IN
MOVAL 62 CI_VLD_IN_IC
MDO0 64 CI_TSI_D0_IC
MDO1 65 CI_TSI_D1_IC
MDO2 66 CI_TSI_D2_IC
MDO3 37 CI_TSI_D3_IC
MDO4 38 CI_TSI_D4_IC
MDO5 39 CI_TSI_D5_IC
MDO6 40 CI_TSI_D6_IC
MDO7 41 CI_TSI_D7_IC
GND 69
GND 70
GND
CI卡座,Single,Black,RH8.0,DIP,SPC-G1-001A,Hadkj
R50
PCB短路
CI_CLK_OUT_IC
CI_CLK_OUT_IC
CC4
GND
NC/NC/片式陶瓷电容,MC,50V,22pF,±5%,NPO,0402,SMD,TP
NC/0ohm-0402-PCB
R52
PCB短路
CI_CLK_IN_IC
CI_CLK_IN_IC
CC5
GND
NC/NC/片式陶瓷电容,MC,50V,22pF,±5%,NPO,0402,SMD,TP
NC/0ohm-0402-PCB
RU16
PCB短路
5V_M
5V_CI
CC1
CC3
片式陶瓷电容,MC,6.3V,10uF,±20%,X5R,0603,SMD,TP
NC/NC/片式陶瓷电容,MC,16V,0.1uF,±20%,X5R,0402,SMD,TP
NC/0ohm-0402-PCB
GND
3V3_M
RC1
RC2
厚膜电阻,1/16W,10kohm,±5%,0402,SMD
厚膜电阻,1/16W,10kohm,±5%,0402,SMD
CI_CD1_IN
CI_CD2_IN
5V_CI
PRC1
1 2 CI_IREQ_IO_IC
3 4 CI_WAIT_IO_IC
5 6 PCM_IOSI16
7 8 CI_RESET_OUT_IC
PRC2
1 2 CI_CE2_IO_IC
3 4 CI_IOWR_IO_IC
5 6 CI_IORD_IO_IC
7 8 CI_OE_IO_IC
RC3 CI_WE_IO_IC
RC4 CI_REG_IO_IC
RC5 CI_CE_IO_IC
排阻,1/16W,4×10kohm,±5%,0402,SMD
排阻,1/16W,4×10kohm,±5%,0402,SMD
厚膜电阻,1/16W,10kohm,±5%,0402,SMD
厚膜电阻,1/16W,10kohm,±5%,0402,SMD
厚膜电阻,1/16W,10kohm,±5%,0402,SMD

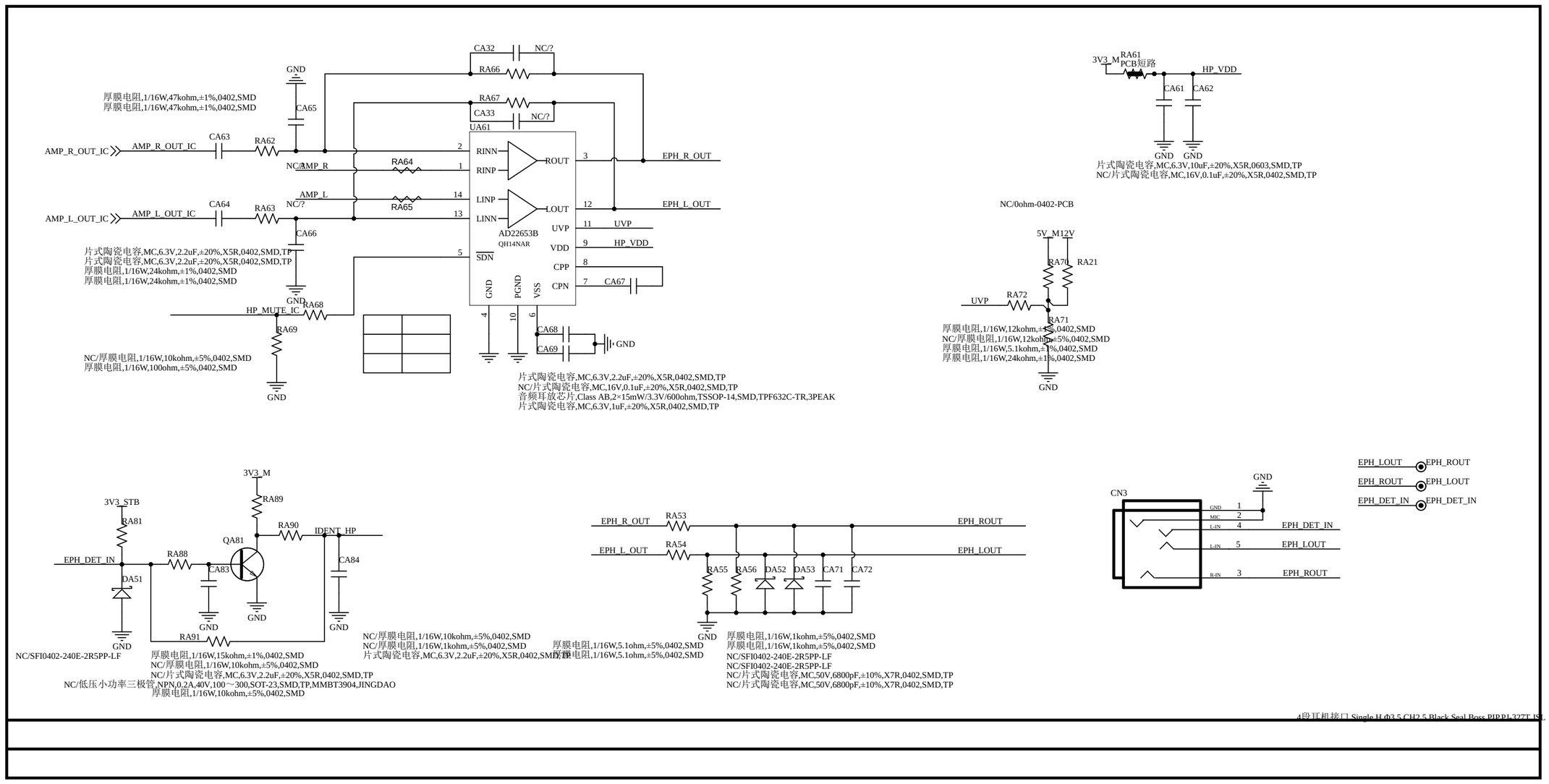
CA32
NC/?
RA66
GND
厚膜电阻,1/16W,47kohm,±1%,0402,SMD
厚膜电阻,1/16W,47kohm,±1%,0402,SMD
CA65
RA67
CA33
NC/?
UA61
AMP_R_OUT_IC
AMP_R_OUT_IC
CA63
RA62
NC/?
AMP_R
RA64
RINN
RINP
ROUT
EPH_R_OUT
AMP_L
NC/?
RA65
LINP
LINN
LOUT
EPH_L_OUT
AMP_L_OUT_IC
AMP_L_OUT_IC
CA64
RA63
AD22653B
QH14NAR
UVP
VDD
HP_VDD
CPP
CPN
CA67
SDN
GND
PGND
VSS
片式陶瓷电容,MC,6.3V,2.2uF,±20%,X5R,0402,SMD,TP
片式陶瓷电容,MC,6.3V,2.2uF,±20%,X5R,0402,SMD,TP
厚膜电阻,1/16W,24kohm,±1%,0402,SMD
厚膜电阻,1/16W,24kohm,±1%,0402,SMD
CA66
GND
HP_MUTE_IC
RA68
RA69
NC/厚膜电阻,1/16W,10kohm,±5%,0402,SMD
厚膜电阻,1/16W,100ohm,±5%,0402,SMD
GND
CA68
CA69
GND
片式陶瓷电容,MC,6.3V,2.2uF,±20%,X5R,0402,SMD,TP
NC/片式陶瓷电容,MC,16V,0.1uF,±20%,X5R,0402,SMD,TP
音频耳放芯片,Class AB,2×15mW/3.3V/600ohm,TSSOP-14,SMD,TPF632C-TR,3PEAK
片式陶瓷电容,MC,6.3V,1uF,±20%,X5R,0402,SMD,TP
3V3_M
RA61
PCB短路
HP_VDD
CA61
CA62
GND
GND
片式陶瓷电容,MC,6.3V,10uF,±20%,X5R,0603,SMD,TP
NC/片式陶瓷电容,MC,16V,0.1uF,±20%,X5R,0402,SMD,TP
NC/0ohm-0402-PCB
5V_M
12V
RA70
RA21
UVP
RA72
RA71
厚膜电阻,1/16W,12kohm,±5%,0402,SMD
NC/厚膜电阻,1/16W,12kohm,±5%,0402,SMD
厚膜电阻,1/16W,5.1kohm,±1%,0402,SMD
厚膜电阻,1/16W,24kohm,±1%,0402,SMD
GND
3V3_M
RA89
3V3_STB
RA81
RA90
IDENT_HP
QA81
EPH_DET_IN
RA88
CA83
CA84
DA51
GND
GND
GND
GND
RA91
NC/SFI0402-240E-2R5PP-LF
厚膜电阻,1/16W,15kohm,±1%,0402,SMD
NC/厚膜电阻,1/16W,10kohm,±5%,0402,SMD
NC/片式陶瓷电容,MC,6.3V,2.2uF,±20%,X5R,0402,SMD,TP
NC/低压小功率三极管,NPN,0.2A,40V,100～300,SOT-23,SMD,TP,MMBT3904,JINGDAO
厚膜电阻,1/16W,10kohm,±5%,0402,SMD
NC/厚膜电阻,1/16W,10kohm,±5%,0402,SMD
NC/厚膜电阻,1/16W,1kohm,±5%,0402,SMD
片式陶瓷电容,MC,6.3V,2.2uF,±20%,X5R,0402,SMD,TP
EPH_R_OUT
RA53
EPH_ROUT
EPH_L_OUT
RA54
EPH_LOUT
RA55
RA56
DA52
DA53
CA71
CA72
GND
厚膜电阻,1/16W,5.1ohm,±5%,0402,SMD
厚膜电阻,1/16W,5.1ohm,±5%,0402,SMD
厚膜电阻,1/16W,1kohm,±5%,0402,SMD
厚膜电阻,1/16W,1kohm,±5%,0402,SMD
NC/SFI0402-240E-2R5PP-LF
NC/SFI0402-240E-2R5PP-LF
NC/片式陶瓷电容,MC,50V,6800pF,±10%,X7R,0402,SMD,TP
NC/片式陶瓷电容,MC,50V,6800pF,±10%,X7R,0402,SMD,TP
GND
CN3
GND
MIC
L-IN
L-IN
R-IN
EPH_DET_IN
EPH_LOUT
EPH_ROUT
EPH_LOUT
EPH_ROUT
EPH_ROUT
EPH_LOUT
EPH_DET_IN
EPH_DET_IN
4段耳机接口,Single H,Φ3.5,CH2.5,Black,Seal Boss,PIP,PJ-327T-ISL

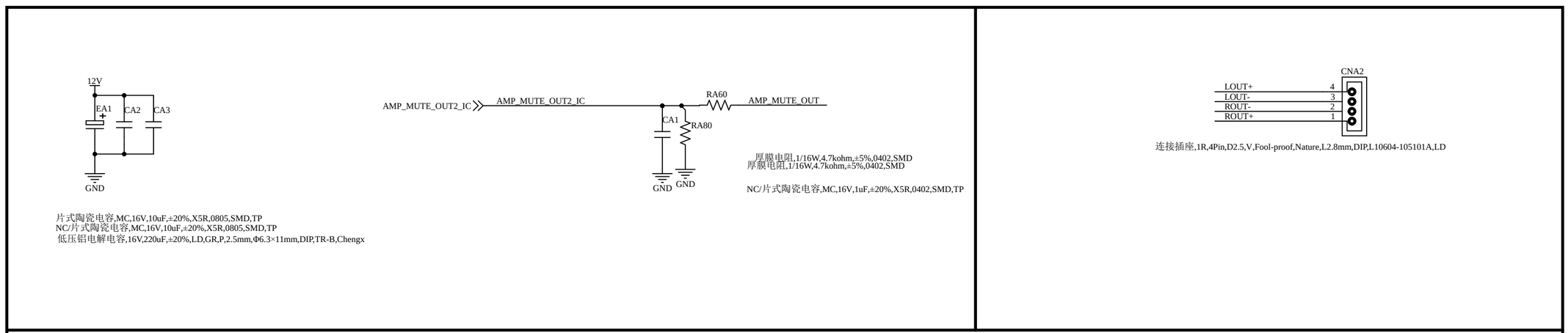
12V
EA1
CA2
CA3
GND
片式陶瓷电容,MC,16V,10uF,±20%,X5R,0805,SMD,TP
NC/片式陶瓷电容,MC,16V,10uF,±20%,X5R,0805,SMD,TP
低压铝电解电容,16V,220uF,±20%,LD,GR,P,2.5mm,Φ6.3×11mm,DIP,TR-B,Chengx
AMP_MUTE_OUT2_IC
AMP_MUTE_OUT2_IC
RA60
AMP_MUTE_OUT
CA1
RA80
GND
GND
厚膜电阻,1/16W,4.7kohm,±5%,0402,SMD
厚膜电阻,1/16W,4.7kohm,±5%,0402,SMD
NC/片式陶瓷电容,MC,16V,1uF,±20%,X5R,0402,SMD,TP
CNA2
LOUT+
LOUT-
ROUT-
ROUT+
连接插座,1R,4Pin,D2.5,V,Fool-proof,Nature,L2.8mm,DIP,L10604-105101A,LD

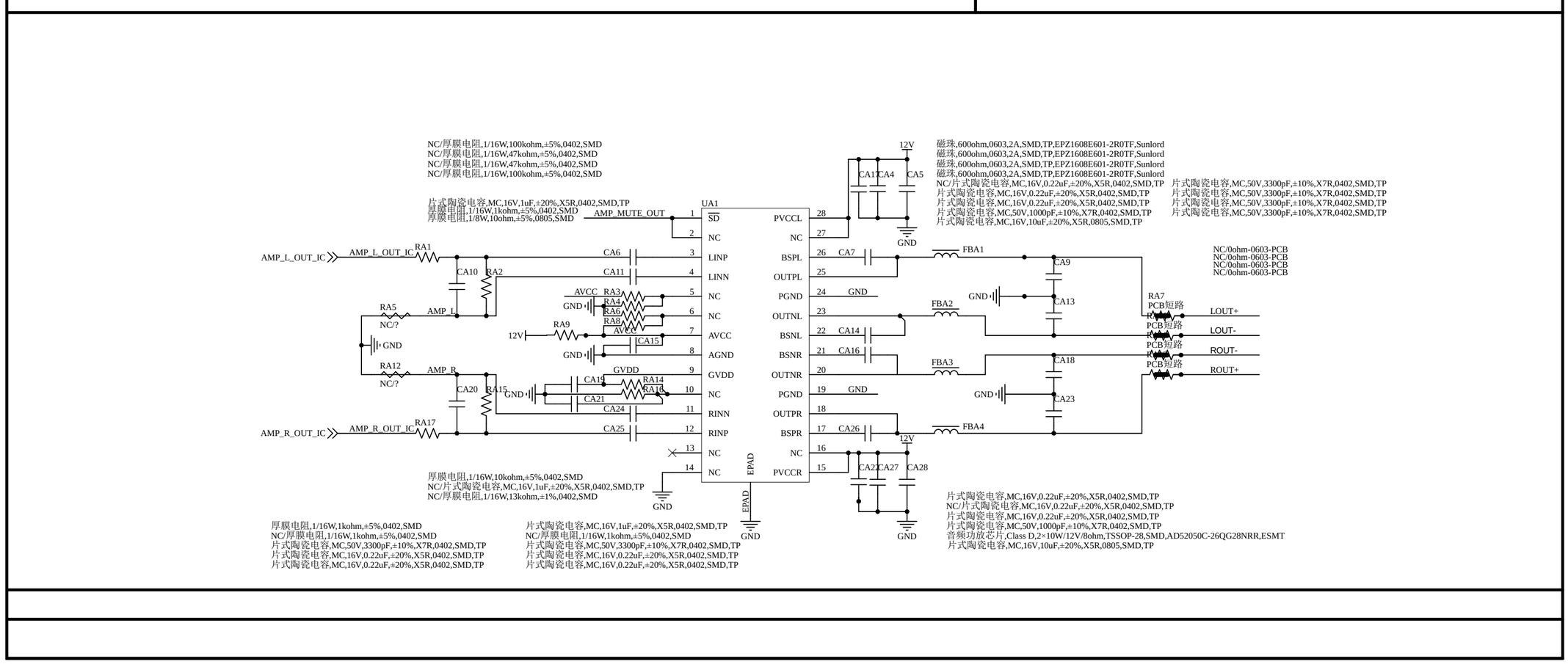
NC/厚膜电阻,1/16W,100kohm,±5%,0402,SMD
NC/厚膜电阻,1/16W,47kohm,±5%,0402,SMD
NC/厚膜电阻,1/16W,47kohm,±5%,0402,SMD
NC/厚膜电阻,1/16W,100kohm,±5%,0402,SMD
片式陶瓷电容,MC,16V,1uF,±20%,X5R,0402,SMD,TP
厚膜电阻,1/16W,1kohm,±5%,0402,SMD
厚膜电阻,1/8W,10ohm,±5%,0805,SMD
AMP_MUTE_OUT
UA1
SD
NC
LINP
LINN
NC
NC
AVCC
AGND
GVDD
NC
RINN
RINP
NC
NC
EPAD
PVCCL
NC
BSPL
OUTPL
PGND
OUTNL
BSNL
BSNR
OUTNR
PGND
OUTPR
BSPR
NC
PVCCR
12V
CA17
CA4
CA5
GND
磁珠,600ohm,0603,2A,SMD,TP,EPZ1608E601-2R0TF,Sunlord
磁珠,600ohm,0603,2A,SMD,TP,EPZ1608E601-2R0TF,Sunlord
磁珠,600ohm,0603,2A,SMD,TP,EPZ1608E601-2R0TF,Sunlord
磁珠,600ohm,0603,2A,SMD,TP,EPZ1608E601-2R0TF,Sunlord
NC/片式陶瓷电容,MC,16V,0.22uF,±20%,X5R,0402,SMD,TP
片式陶瓷电容,MC,16V,0.22uF,±20%,X5R,0402,SMD,TP
片式陶瓷电容,MC,16V,0.22uF,±20%,X5R,0402,SMD,TP
片式陶瓷电容,MC,50V,1000pF,±10%,X7R,0402,SMD,TP
片式陶瓷电容,MC,16V,10uF,±20%,X5R,0805,SMD,TP
片式陶瓷电容,MC,50V,3300pF,±10%,X7R,0402,SMD,TP
片式陶瓷电容,MC,50V,3300pF,±10%,X7R,0402,SMD,TP
片式陶瓷电容,MC,50V,3300pF,±10%,X7R,0402,SMD,TP
片式陶瓷电容,MC,50V,3300pF,±10%,X7R,0402,SMD,TP
AMP_L_OUT_IC
AMP_L_OUT_IC
RA1
CA6
CA10
RA2
CA11
AVCC
RA3
RA4
RA5
AMP_L
RA6
RA8
NC/?
RA9
CA15
12V
GND
RA12
AMP_R
NC/?
GVDD
CA19
RA14
RA18
CA20
RA15
CA21
CA24
AMP_R_OUT_IC
AMP_R_OUT_IC
RA17
CA25
CA7
FBA1
CA9
GND
FBA2
CA13
CA14
CA16
FBA3
CA18
CA23
CA26
FBA4
CA22
CA27
CA28
NC/0ohm-0603-PCB
NC/0ohm-0603-PCB
NC/0ohm-0603-PCB
NC/0ohm-0603-PCB
RA7
PCB短路
LOUT+
LOUT-
ROUT-
ROUT+
厚膜电阻,1/16W,10kohm,±5%,0402,SMD
NC/片式陶瓷电容,MC,16V,1uF,±20%,X5R,0402,SMD,TP
NC/厚膜电阻,1/16W,13kohm,±1%,0402,SMD
厚膜电阻,1/16W,1kohm,±5%,0402,SMD
NC/厚膜电阻,1/16W,1kohm,±5%,0402,SMD
片式陶瓷电容,MC,50V,3300pF,±10%,X7R,0402,SMD,TP
片式陶瓷电容,MC,16V,0.22uF,±20%,X5R,0402,SMD,TP
片式陶瓷电容,MC,16V,0.22uF,±20%,X5R,0402,SMD,TP
片式陶瓷电容,MC,16V,1uF,±20%,X5R,0402,SMD,TP
NC/厚膜电阻,1/16W,1kohm,±5%,0402,SMD
片式陶瓷电容,MC,50V,3300pF,±10%,X7R,0402,SMD,TP
片式陶瓷电容,MC,16V,0.22uF,±20%,X5R,0402,SMD,TP
片式陶瓷电容,MC,16V,0.22uF,±20%,X5R,0402,SMD,TP
片式陶瓷电容,MC,16V,0.22uF,±20%,X5R,0402,SMD,TP
片式陶瓷电容,MC,16V,0.22uF,±20%,X5R,0402,SMD,TP
片式陶瓷电容,MC,50V,1000pF,±10%,X7R,0402,SMD,TP
音频功放芯片,Class D,2×10W/12V/8ohm,TSSOP-28,SMD,AD52050C-26QG28NRR,ESMT
片式陶瓷电容,MC,16V,10uF,±20%,X5R,0805,SMD,TP

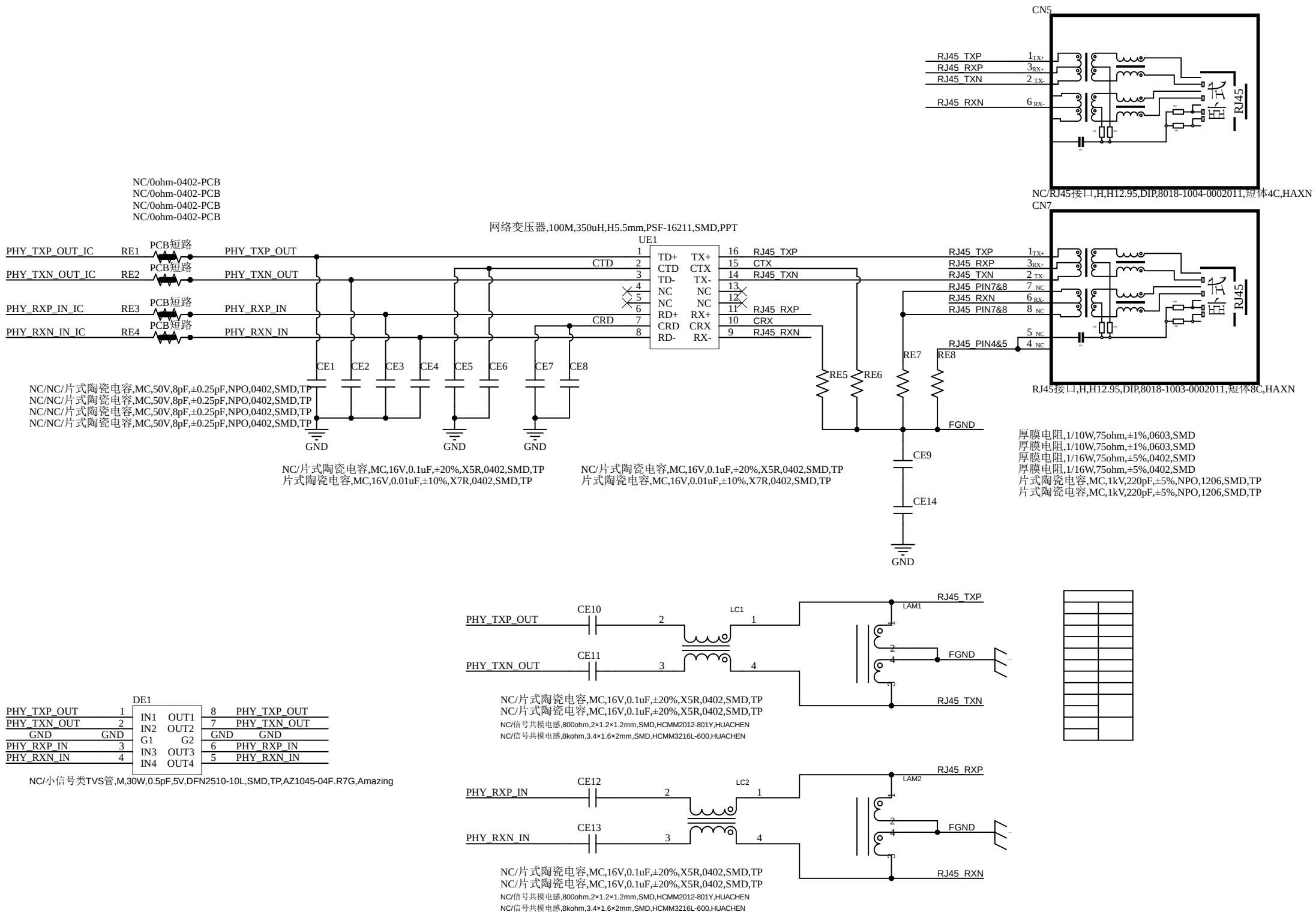
CN5
RJ45_TXP
RJ45_RXP
RJ45_TXN
RJ45_RXN
NC/RJ45接口,H,H12.95,DIP,8018-1004-0002011,短体4C,HAXN
CN7
RJ45_PIN7&8
RJ45_PIN4&5
RJ45接口,H,H12.95,DIP,8018-1003-0002011,短体8C,HAXN
NC/0ohm-0402-PCB
NC/0ohm-0402-PCB
NC/0ohm-0402-PCB
NC/0ohm-0402-PCB
网络变压器,100M,350uH,H5.5mm,PSF-16211,SMD,PPT
UE1
PHY_TXP_OUT_IC
PHY_TXN_OUT_IC
PHY_RXP_IN_IC
PHY_RXN_IN_IC
RE1
RE2
RE3
RE4
PCB短路
PHY_TXP_OUT
PHY_TXN_OUT
PHY_RXP_IN
PHY_RXN_IN
CTD
CRD
TD+ TX+
CTD CTX
TD- TX-
NC NC
NC NC
RD+ RX+
CRD CRX
RD- RX-
CE1 CE2 CE3 CE4 CE5 CE6 CE7 CE8
NC/NC/片式陶瓷电容,MC,50V,8pF,±0.25pF,NPO,0402,SMD,TP
NC/NC/片式陶瓷电容,MC,50V,8pF,±0.25pF,NPO,0402,SMD,TP
NC/NC/片式陶瓷电容,MC,50V,8pF,±0.25pF,NPO,0402,SMD,TP
NC/NC/片式陶瓷电容,MC,50V,8pF,±0.25pF,NPO,0402,SMD,TP
GND
NC/片式陶瓷电容,MC,16V,0.1uF,±20%,X5R,0402,SMD,TP
片式陶瓷电容,MC,16V,0.01uF,±10%,X7R,0402,SMD,TP
RE5 RE6 RE7 RE8
FGND
CE9
CE14
厚膜电阻,1/10W,75ohm,±1%,0603,SMD
厚膜电阻,1/10W,75ohm,±1%,0603,SMD
厚膜电阻,1/16W,75ohm,±5%,0402,SMD
厚膜电阻,1/16W,75ohm,±5%,0402,SMD
片式陶瓷电容,MC,1kV,220pF,±5%,NPO,1206,SMD,TP
片式陶瓷电容,MC,1kV,220pF,±5%,NPO,1206,SMD,TP
CE10
CE11
LC1
LAM1
NC/片式陶瓷电容,MC,16V,0.1uF,±20%,X5R,0402,SMD,TP
NC/片式陶瓷电容,MC,16V,0.1uF,±20%,X5R,0402,SMD,TP
NC/信号共模电感,800ohm,2×1.2×1.2mm,SMD,HCMM2012-801Y,HUACHEN
NC/信号共模电感,8kohm,3.4×1.6×2mm,SMD,HCMM3216L-600,HUACHEN
DE1
IN1 OUT1
IN2 OUT2
G1 G2
IN3 OUT3
IN4 OUT4
NC/小信号类TVS管,M,30W,0.5pF,5V,DFN2510-10L,SMD,TP,AZ1045-04F.R7G,Amazing
CE12
CE13
LC2
LAM2
NC/片式陶瓷电容,MC,16V,0.1uF,±20%,X5R,0402,SMD,TP
NC/片式陶瓷电容,MC,16V,0.1uF,±20%,X5R,0402,SMD,TP
NC/信号共模电感,800ohm,2×1.2×1.2mm,SMD,HCMM2012-801Y,HUACHEN
NC/信号共模电感,8kohm,3.4×1.6×2mm,SMD,HCMM3216L-600,HUACHEN

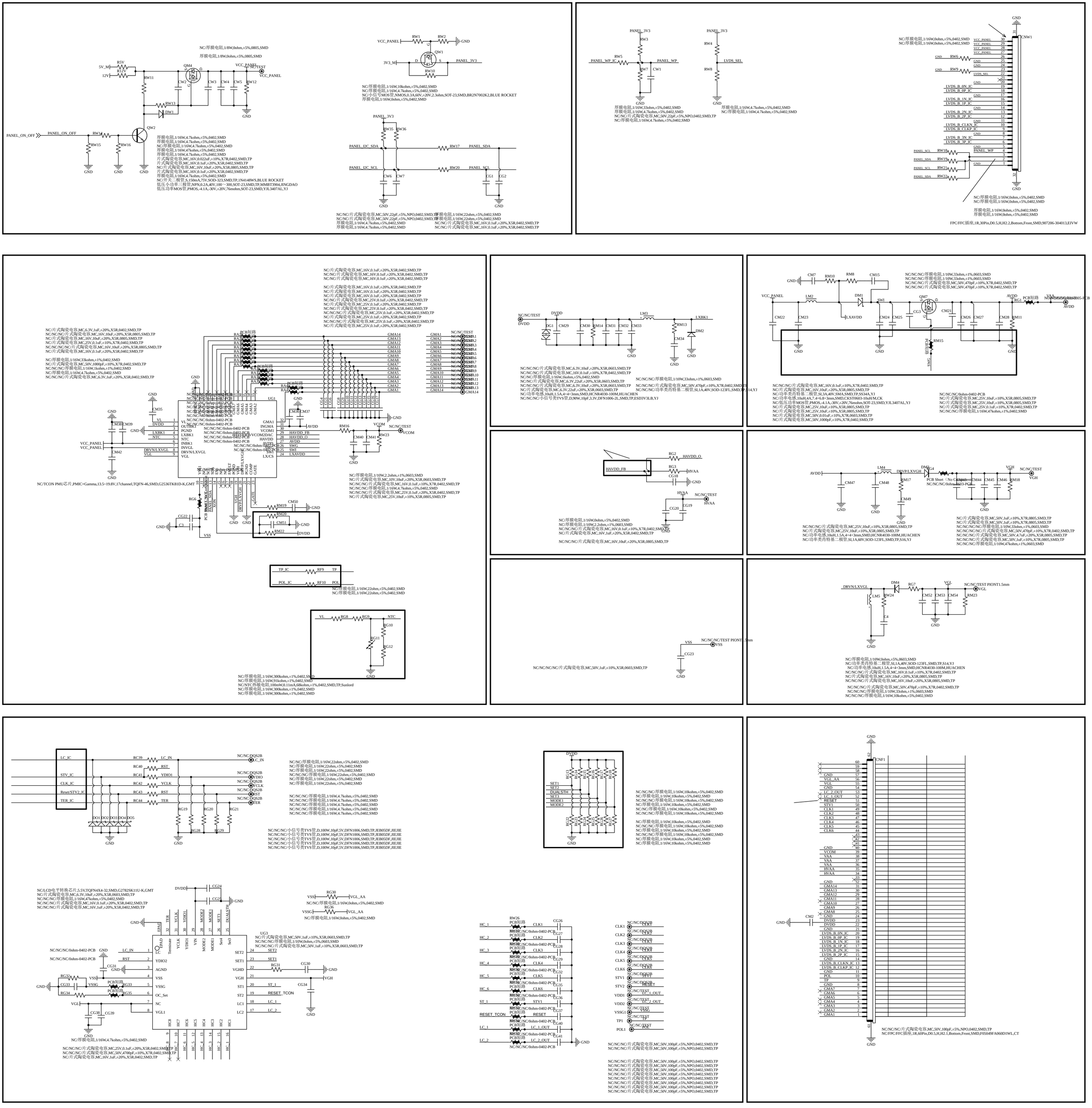
NC/厚膜电阻,1/8W,0ohm,±5%,0805,SMD
厚膜电阻,1/8W,0ohm,±5%,0805,SMD
5V_M
R5V
R12V
12V
RW11
QM4
VCC_PANEL
NC/TEST
VCC_PANEL
CW2
CW3
CW4
CW5
RW12
RW13
DW1
GND
PANEL_ON_OFF
RW14
RW15
RW16
QW2
厚膜电阻,1/16W,4.7kohm,±5%,0402,SMD
厚膜电阻,1/16W,4.7kohm,±5%,0402,SMD
NC/厚膜电阻,1/16W,4.7kohm,±5%,0402,SMD
厚膜电阻,1/16W,47kohm,±5%,0402,SMD
厚膜电阻,1/16W,4.7kohm,±5%,0402,SMD
片式陶瓷电容,MC,16V,0.022uF,±10%,X7R,0402,SMD,TP
片式陶瓷电容,MC,16V,0.1uF,±20%,X5R,0402,SMD,TP
NC/片式陶瓷电容,MC,16V,10uF,±20%,X5R,0805,SMD,TP
片式陶瓷电容,MC,16V,0.1uF,±20%,X5R,0402,SMD,TP
厚膜电阻,1/16W,4.7kohm,±5%,0402,SMD
NC/开关二极管S,150mA,75V,SOD-323,SMD,TP,1N4148WS,BLUE ROCKET
低压小功率三极管,NPN,0.2A,40V,100~300,SOT-23,SMD,TP,MMBT3904,JINGDAO
低压功率MOS管,PMOS,-4.1A,-30V,±20V,76mohm,SOT-23,SMD,YJL3407AL,YJ
VCC_PANEL
RW1
RW2
QW1
3V3_M
D
S
PANEL_3V3
RW10
NC/厚膜电阻,1/16W,10kohm,±5%,0402,SMD
NC/厚膜电阻,1/16W,4.7kohm,±5%,0402,SMD
NC/小信号MOS管,NMOS,0.3A,60V,±20V,2.3ohm,SOT-23,SMD,BR2N7002K2,BLUE ROCKET
厚膜电阻,1/16W,0ohm,±5%,0402,SMD
PANEL_3V3
RW35
RW36
PANEL_I2C_SDA
RW17
PANEL_SDA
PANEL_I2C_SCL
RW20
PANEL_SCL
CW6
CW7
CG1
CG2
NC/NC/片式陶瓷电容,MC,50V,22pF,±5%,NPO,0402,SMD,TP
NC/NC/片式陶瓷电容,MC,50V,22pF,±5%,NPO,0402,SMD,TP
厚膜电阻,1/16W,4.7kohm,±5%,0402,SMD
厚膜电阻,1/16W,4.7kohm,±5%,0402,SMD
厚膜电阻,1/16W,22ohm,±5%,0402,SMD
厚膜电阻,1/16W,22ohm,±5%,0402,SMD
NC/NC/片式陶瓷电容,MC,16V,0.1uF,±20%,X5R,0402,SMD,TP
NC/NC/片式陶瓷电容,MC,16V,0.1uF,±20%,X5R,0402,SMD,TP
PANEL_3V3
RW3
RW5
PANEL_WP_IC
PANEL_WP
RW7
CW1
PANEL_3V3
RW4
LVDS_SEL
RW8
厚膜电阻,1/16W,33ohm,±5%,0402,SMD
厚膜电阻,1/16W,4.7kohm,±5%,0402,SMD
NC/NC/片式陶瓷电容,MC,50V,22pF,±5%,NPO,0402,SMD,TP
NC/厚膜电阻,1/16W,4.7kohm,±5%,0402,SMD
厚膜电阻,1/16W,4.7kohm,±5%,0402,SMD
NC/厚膜电阻,1/16W,4.7kohm,±5%,0402,SMD
NC/厚膜电阻,1/16W,0ohm,±5%,0402,SMD
NC/厚膜电阻,1/16W,0ohm,±5%,0402,SMD
CNW1
VCC_PANEL
LVDS_SEL
LVDS_B_0N_IC
LVDS_B_0P_IC
LVDS_B_1N_IC
LVDS_B_1P_IC
LVDS_B_2N_IC
LVDS_B_2P_IC
LVDS_B_CLKN_IC
LVDS_B_CLKP_IC
LVDS_B_3N_IC
LVDS_B_3P_IC
PANEL_WP
RW6
RW9
RW18
RW19
RW21
RW22
PANEL_SCL
PANEL_SDA
NC/厚膜电阻,1/16W,0ohm,±5%,0402,SMD
NC/厚膜电阻,1/16W,0ohm,±5%,0402,SMD
厚膜电阻,1/16W,0ohm,±5%,0402,SMD
厚膜电阻,1/16W,0ohm,±5%,0402,SMD
FPC/FFC插座,1R,30Pin,D0.5,H,H2.2,Bottom,Front,SMD,907206-304013,EIVW
NC/片式陶瓷电容,MC,6.3V,1uF,±20%,X5R,0402,SMD,TP
NC/NC/NC/片式陶瓷电容,MC,16V,10uF,±20%,X5R,0805,SMD,TP
NC/片式陶瓷电容,MC,16V,10uF,±20%,X5R,0805,SMD,TP
NC/片式陶瓷电容,MC,25V,0.1uF,±10%,X7R,0402,SMD,TP
NC/NC/NC/NC/片式陶瓷电容,MC,16V,10uF,±20%,X5R,0805,SMD,TP
NC/片式陶瓷电容,MC,16V,0.1uF,±20%,X5R,0402